WHITEFISH BAY COMMUNITY DEVELOPMENT AUTHORITY

MEETING NOTICE AND AGENDA

WHITEFISH BAY VILLAGE HALL
5300 N. MARLBOROUGH DR.

Monday, January 27, 2020
6:30PM

I. Call to Order and Roll Call

II. General Business

1. Approval of Minutes from the meeting held on November 11, 2019.

2. Review and action on architectural and site plans for Town Bank to be located at 105 W. Silver Spring Drive.

3. Review and action on Downtown Incentive Grant Application from Hayat Pharmacy – 424 E. Silver Spring Drive.

4. The CDA may convene into Closed Session pursuant to Wisconsin State Statute §19.85(1)(e) deliberating or negotiating the purchase of public property, investing of public funds, conducting other specified business whenever competitive and/or bargaining reasons require a closed session – specifically regarding the Incentive Grant Applications referenced in Item 3 above.
The CDA will return to open session upon completion of the closed session.

5. Discussion and possible action to authorize staff to move forward with construction drawings and bid specifications for redevelopment of Consaul Commons.

6. Discussion regarding potential modifications to the Downtown Incentive Grant Program.

7. Continued discussion and possible action on Item #3 above (if needed).

III. Adjourn

Upon reasonable notice, efforts will be made to accommodate the needs of disabled individuals through appropriate aids and services. Contact Village Hall at (414) 962-6690. It is possible that members of and possibly a quorum of members of other Boards, Commissions, or Committees of the Village including in particular the BID Board may be in attendance in the above stated meeting to gather information; no action will be taken by any other Boards, Commissions, or Committees of the Village except by the Board, Commission, or Committee noticed above. Agendas and minutes are available on the Village website (www.wfbvillage.org)

COMMUNITY DEVELOPMENT AUTHORITY MEETING MINUTES
Monday, November 11, 2019
6:30 pm

VILLAGE OF WHITEFISH BAY – Village Hall Historical Room
5300 North Marlborough Drive

I. Call to Order and Roll Call

Chairperson Ray Krueger called the meeting to order at 6:30 pm.

Present: Chairperson Ray Krueger, Village President Julie Siegel, Village Trustee Jay Saunders, Mike Dwyer, Brian Vanevenhoven, Jim Roemer, Michael Harrigan, and Sarah Malik

Also Present: Village Manager Paul Boening, Assistant Manager Tim Blakeslee, Public Works Director John Edlebeck, Stephanie Hacker with Graef

II. General Business

1. **Approval of Minutes from the meeting held on October 15, 2019.**

Brian Vanevenhoven moved to approve the minutes of the October 15, 2019 meeting. Jim Roemer seconded. Motion passed 7-0.

2. **Discussion/Action on the funding request from the Whitefish Bay Business Improvement District Board.**

Jeff Commer and Phil Aiello with the Whitefish Bay Business Improvement District (BID) presented their request for a grant. They provided additional information from the meeting in October when the grant was tabled. There were questions from the CDA about what the funds will be used for and their priority. There was a discussion about the sustainability of funding and moving forward. There was a discussion about funding the full amount this year and coming back next year. Jeff Commer and Phil Aiello said it would be nice to be able to plan for two years. Jim Roemer thought that funding at $48,500 this year and $38,500 plus a matching $10,000 in 2021 provided $10,000 is also raised by the BID would be a good option and encourage the BID to look at the long term funding. There was a discussion about the current BID assessment and raising it in the future.

Chairperson Ray Krueger moved to approve the BID request for $48,500 in 2020 and $38,500 plus a matching $10,000 in 2021 provided $10,000 is also raised by the BID. Jim Roemer seconded. Motion passed 7-0.

DRAFT

3. **Review and recommendation of a design concept to the Village Board for the redevelopment of Consaul Commons.**

Luke Haas and Tom Mortensen with raSmith presented an overview of the final Consaul Commons concept. Luke Haas provided a summary of changes from the previous design. There was a discussion about cost and that there is a $40,000 commitment from Mandel to renovate the space. There was a discussion about turf vs. grass. The CDA determined that the turf vs. grass issue would need to continue to be evaluated. There was a discussion about TID#1 balance.

Jim Roemer moved to recommend that the Village Board approve final Consaul Commons Design provided by raSmith subject to a continued review of turf or grass options. Mike Dwyer seconded. Motion passed 6-1 (Trustee Saunders Dissenting)

4. **Discussion and possible action on Downtown Incentive Grant Application for 629 East Silver Spring Drive (Applicant – K & S Investments).**

Assistant Manager Tim Blakeslee provided a summary of the grant application. The applicant has requested that the Downtown Incentive Grant Program fund 50.0% ($95,422.00) of the project cost. It is a $60,300.00 grant for new life-safety related work and a $35,122.00 grant for work previously completed which is an ineligible cost as part of the program but was included as a part of the grant application package for the CDA to consider as part of the request. Blakeslee provided a summary of how this project fits into the various plans for Silver Spring Drive. There was a discussion of previous grants and levels of funding provided to other businesses. There was a discussion of eligible vs. ineligible costs in the grant program. There was a discussion about what was provided previously to K & S Investments.

Chairperson Ray Krueger moved to recommend that the Village Board approve a grant in the amount of $60,300.00 for fire alarms for K & S Investments. Mike Harrigan seconded. Motion passed 5-2 (Trustee Jim Roemer and Brian Vanevenhoven dissenting)

Mike Harrigan moved to deny the grant request for $35,122.00 for additional second-floor costs. Mike Dwyer seconded. Motion passed 7-0.

5. **The CDA may convene into Closed Session pursuant to Wisconsin State Statute §19.85(1)(e) deliberating or negotiating the purchase of public property, investing of public funds, conducting other specified business whenever competitive and/or bargaining reasons require a closed session – specifically regarding the Incentive Grant Applications referenced in Item 4 above.**

Closed session was not held.

DRAFT

III. Adjourn: Jay Saunders moved to adjourn at 8:32 pm. Mike Harrigan seconded. Motion passed 7-0.

DRAFT

CDA MEETING STAFF REPORT

REPORT TO: Chairman Ray Krueger & CDA Members

REPORT FROM: Paul Boening – Village Manager

DATE: 1/22/20

AGENDA ITEM: Review and action on architectural and site plans for Town Bank to be located at 105 W. Silver Spring Drive

ACTION REQUESTED:___Ordinance ___Resolution __√__Motion _____Information Only

BACKGROUND

The applicant is requesting final architectural and site plan approval for an approximate 4,112 square foot Town Bank building to be located on a .35-acre site at 105 W. Silver Spring Drive. The proposal includes the demolition of the existing Modern Touch Dental and Connections Ticket Service buildings and combination of the two lots into a single parcel. The Plan Commission approved the Conditional Use Application for the bank tenancy on 12/18/19. The Architectural Review Commission (ARC) reviewed the building and site plans on 12/19/19 and recommended that the CDA approve the plans subject to conditions that will be addressed in this report. The Village Board approved the Certified Survey Map for the lot combination on 1/6/20. Since this property is located within District 11 (Silver Spring District), the CDA is responsible for review of the building and site plans. The plan submittal is attached.

Building Services Director Joel Oestreich and DPW Director John Edlebeck have reviewed the plans on behalf of the Village. Director Oestreich has confirmed that the plans are generally compliant with Village Code requirements aside from a few minor items that are reflected in red on the attached "Building Design Standards" review checklist. Director Edlebeck has recommended some technical modifications that have been shared with the applicant. Director Edlebeck will be responsible for review and approval of final engineering plans.

Site Plan:

The plan includes a 2-story bank building with a footprint of 2,663 square feet and 4,112 total square feet of floor area. Access to and from the site is proposed from both Silver Spring Drive and Bay Ridge Avenue. There is also a proposed drive-thru teller lane (single lane) on the south side of the parcel that will exit to Bay Ridge Avenue. A total of 14 on-site parking stalls are included on the

plan. Per Village Code requirements, 16 on-site stalls would be required. However, the Plan Commission granted a waiver for the 2 spot deficiency on 12/18/19 due to the availability of street parking in the immediate area.

Building Design:

As was previously noted, ARC has recommended approval of the design elements. The applicant has met the District 11 Design Standards pertaining to setbacks, "build to" lines, height, building proportions, entrance location, glazing percentages and façade materials. Again, there are a few minor items requiring refinement. Those items are reflected in red on the attached "Building Design Standards" review checklist. The applicant is advised to bring samples of building materials and colors to the CDA meeting.

Dumpster Enclosure:

ARC has recommended that the dumpster enclosure be reflect the same type of building materials as used in the principle building.

Landscaping/Screening Plan:

Village Code requires the perimeter of the parking lot to be screened. The plans reflect the installation of a wood fence. However, Village Code requires metal or masonry. Staff review and approval is recommended.

Mechanicals:

Allowed on roof or rear yard with proper screening. Staff review and approval is recommended.

Lighting Plan:

I recommend approval subject to staff review and approval the light fixture designs for pole lights, wall packs, and floodlights.

Sign Plan:

Subject to Building Inspector review and approval.

Staff Comment:

I recommend **approval** of this development subject to the following:

1. CDA review and approval of building materials and color palette.

2. Submittal and staff approval of a dumpster enclosure that reflects the same building materials as the principal building.

3. Submittal and staff approval of a detailed, colored, and dimensioned sign plan.

4. Compliance with all conditions included in the ARC recommendation (attached).

5. Compliance with all provisions of Section 16-21(E) of the Zoning Code.

6. Staff review and approval of landscaping/screening plans.

7. Staff review and approval of the light fixture designs for pole lights, wall packs, and flood lights.

8. Final execution and recording of the Certified Survey Map to combine the existing lots.

9. Village Engineer review and approval of sewer, stormwater, water, and grading plans.

RECOMMENDED ACTION

To approve the architectural and site plans for Town Bank subject to the aforementioned conditions.

Village of Whitefish Bay
5300 N. Marlborough Drive • Whitefish Bay, Wisconsin 53217 • (414) 962-6690 • Fax (414) 962-5651

December 20, 2019

Dear CDA Members,

On December 19, 2019, The ARC moved to recommend approval of the design for the Town Bank building located at 105 W Silver Spring Dr. The recommendation came with the following conditions that the ARC would like to CDA to consider:

1. Dumpster enclosure to be of like materials of the building (Stone, Brick)
2. Remote teller unit to be powder coated a color that matches the metal on the building
3. Exterior glass color to be consistent with surrounding buildings and have a quality to reflect sunlight, headlights etc.
4. Lamp to be installed over ATM unit
5. Wrap parapet around entire roofline with like materials

Respectfully,

Joel Oestreich
Director of Building Services

Section 16-21(E) Building Design Standards

1 **Vehicular Access**
   a. Access from North from Silver Spring
      i. Must maintain driveway width <24 feet
   b. Access from East from Bay Ridge
      i. Must maintain driveway width <24 feet

2 **Build to and Setback Lines**
   a. Silver Spring (north property line)
      i. Setback 10 feet required
      ii. Build to line 10 – 11 feet required for 90%
   b. Bay Ridge (east property line)
      i. Setback 10 feet required
      ii. Build to line 10 – 15 feet required for 75%

3 **Alleys**
   a. None proposed

4 **Building Composition – Height**
   a. Does not exceed height limit

5 **Building Composition - Base, Middle, Top**
   a. This area of code requires CDA / ARC review

6 **Building Composition – Roofscape**
   a. None proposed
   b. Mechanicals not shown

7 **Building Composition – Proportion (Height vs. Width)**
   a. This area of code requires CDA / ARC review

8 **Entrance Location**
   a. Entrances to the ground floor shall be along main streets

9 **Transparency**
   a. Silver Spring Drive
      i. Verify that glazing is clear glass(transmits 65% visible daylight)
      ii. Sill height is less than 2’-6”
      iii. Requires 75% of frontage to be glazing
      iv. Interior space must be visible to a depth of 12 feet
   b. Side Streets, Bay Ridge
      i. Requires 50% of frontage to be glazing except when substituted by glazing alternatives. See 16-21(9)(c)
         1. This area of code requires CDA attention for substitutions 16-21(9)(d)
      ii. Interior space must be visible to a depth of 12 feet

10 **Materials**
   a. 80% durable masonry

11 Landscape and Screening

a. No landscape plan was submitted
    i. Must screen perimeter of parking lot
    ii. Must screen service areas
    iii. Wood fence proposed –code requires metal or masonry
    iv. Staff review recommended

12 Lighting

a. No lighting plan submitted
b. Staff review recommended

13 Mechanical Equipment

a. Plans do not show mechanical equipment
    i. Allowed on roof with proper screening
    ii. Allowed in rear yard with proper screening
    iii. Staff review recommended

14 Ground Floor Setback Zone

i. Hoods and Canopies
    1. None proposed

ii. Awnings
    1. Maximum projection of 6’
    2. Cannot be closer than 2’ to curb
    3. 8’ clearance from frame to sidewalk
    4. 7’-3” from material to sidewalk

iii. Signage
    1. The sign proposal is not part of this approval process
    2. Applicant will need to submit for a sign permit

iv. Architectural Elements
    1. May not extend more than 3’into the setback

v. Street Furnishings
    1. None proposed

VIEW WEST FROM N BAY RIDGE AVE

VIEW NORTHWEST FROM N BAY RIDGE AVE

REAR OF EXISTING BUILDINGS

EAST ELEVATION

NE BUILDING CORNER LOOKING WEST DOWN SILVER SPRING

VIEW OUT FROM SW CORNER OF SILVER SPRING & BAY RIDGE

FRONT OF BUILDING LOOKING EAST DOWN SILVER SPRING

VIEW BETWEEN (2) BUILDINGS ON SITE, LOOKING SOUTH

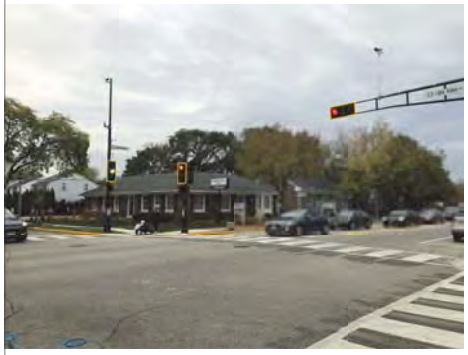

VIEW TO SITE FROM NE CORNER OF SILVER SPRING & BAY RIDGE

NORTH ELEVATION

DETAIL OF EXISTING BUILDING CONDITION

THE REDMOND COMPANY
• DESIGN • CONSTRUCTION
• CONSULTING• MANAGEMENT
W228 N745 Westmound Drive
Waukesha, Wisconsin 53186
tel 262.549.9600 fax
Innovative Approach. Unique Solutions.
www.theredmondco.com

Town Bank - 105 W Silver Spring

Site Photographs

1/27/2020 20033

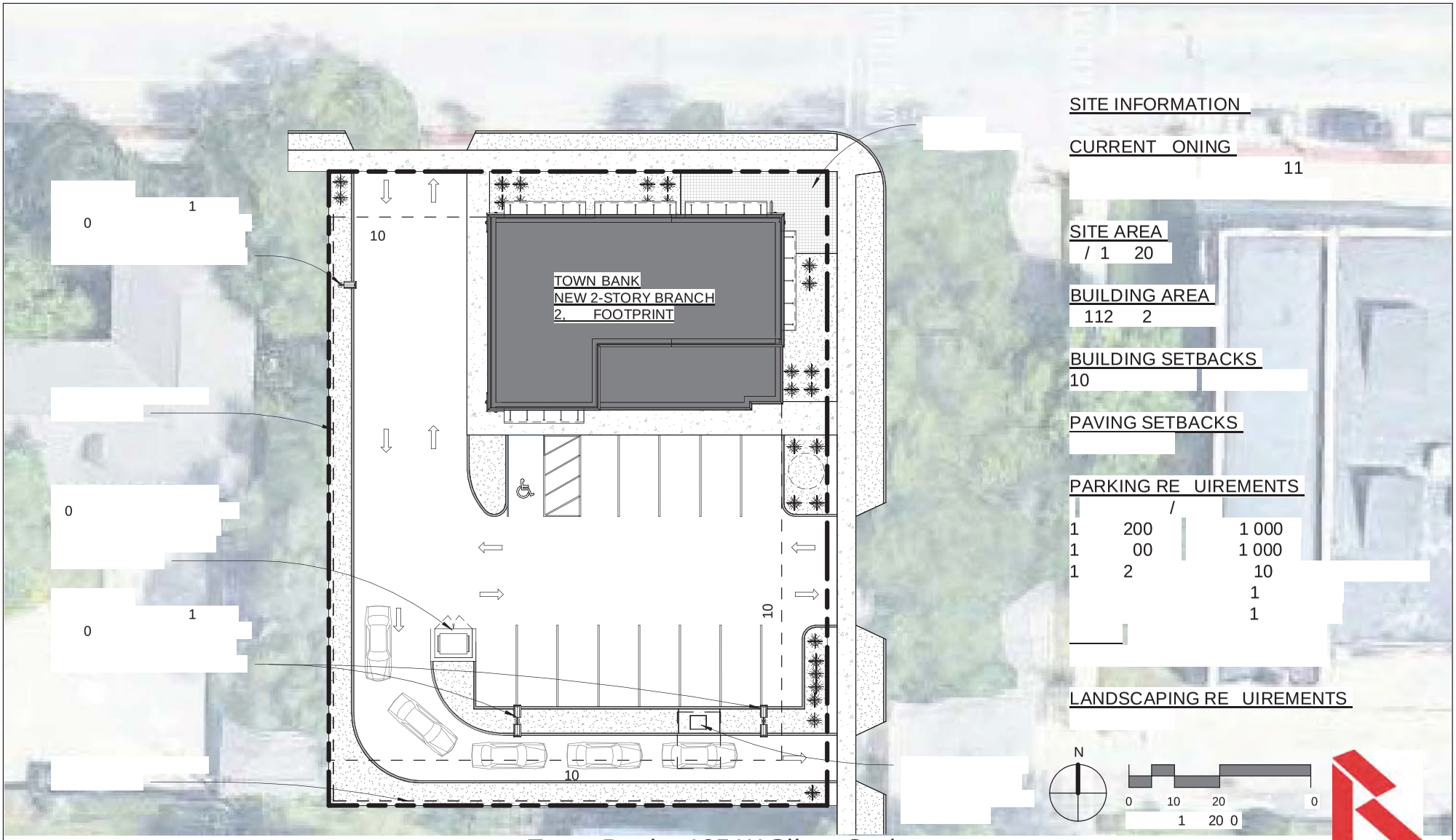

SITE INFORMATION

CURRENT ONING

11

SITE AREA

/ 1 20

BUILDING AREA

112 2

BUILDING SETBACKS

10

PAVING SETBACKS

PARKING RE UIREMENTS

		/
1	200	1 000
1	00	1 000
1	2	10
		1
		1

LANDSCAPING RE UIREMENTS

Town Bank - 105 W Silver Spring

S he ati Site Plan

1/27/2020

20033

CONSTRUCTION GROSS AREA

2 3

1

112

Town Bank - 105 W Silver Spring

S he ati First Floor Plan

1/27/2020

20033

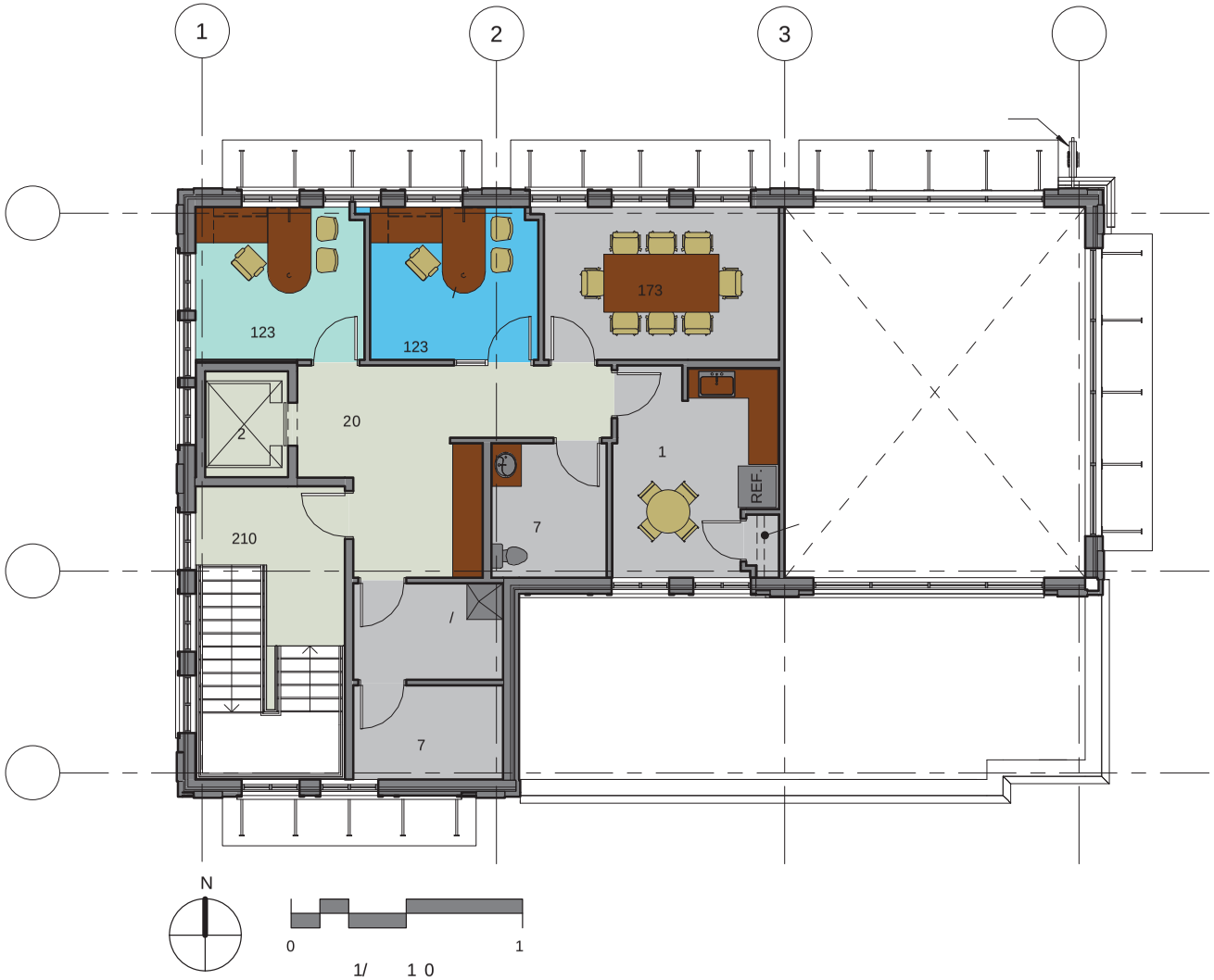

CONSTRUCTION GROSS AREA

2 3
1
112

Town Bank - 105 W Silver Spring

S he ati Se on Floor Plan

1/27/2020

20033

1

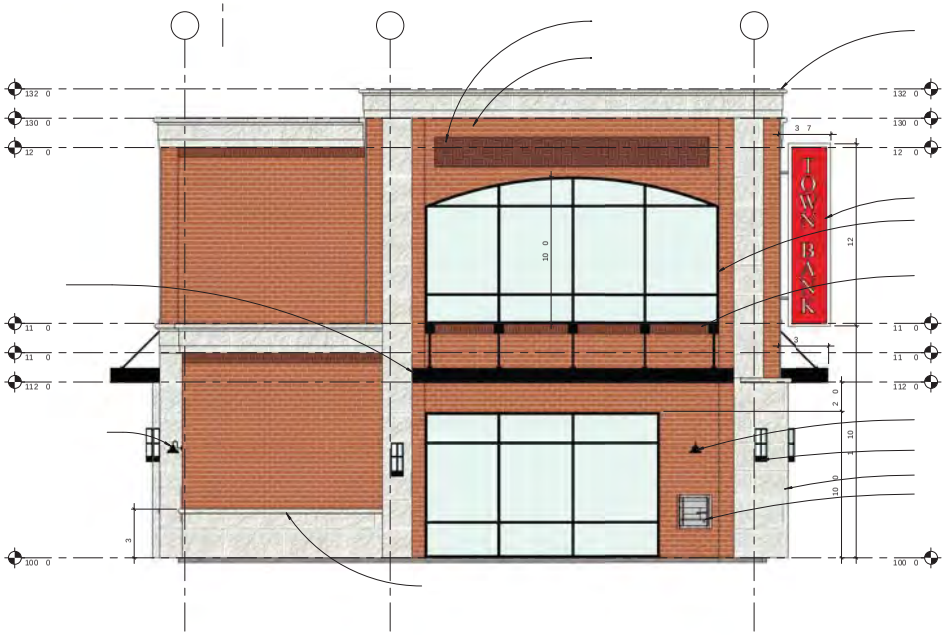

2

Town Bank - 105 W Silver Spring

E terior Elevations

THE REDMOND COMPANY
• DESIGN • CONSTRUCTION
• CONSULTING• MANAGEMENT
W228 N745 Westmound Drive
Waukesha, Wisconsin 53186
tel 262.549.9600 fax
Innovative Approach. Unique Solutions.
www.theredmondco.com

1/27/2020

20033

1 1/ 1 0

2 1/ 1 0

Town Bank - 105 W Silver Spring

E terior Elevations

THE REDMOND COMPANY
• DESIGN • CONSTRUCTION
• CONSULTING• MANAGEMENT
W228 N745 Westmound Drive
Waukesha, Wisconsin 53186
tel 262.549.9600 fax
Innovative Approach. Unique Solutions.
www.theredmondco.com

1/27/2020 20033

Village of Whitefish Bay
5300 N. Marlborough Drive • Whitefish Bay, Wisconsin 53217 • (414) 962-6690 • Fax (414) 962-5651

MEMORANDUM

TO: Community Development Authority
Paul Boening, Village Manager

FROM: Tim Blakeslee, Assistant Village Manager

DATE: January 21, 2020

SUBJECT: Downtown Incentive Grant Application Review: Whitefish Bay Pharmacy by Hayat

A. PURPOSE

Consider for approval the Downtown Incentive Grant Application of Whitefish Bay Pharmacy by Hayat at 424 E Silver Spring Dr, Whitefish Bay, WI 53217 on parcel number 1650341000. The applicant has requested that the Downtown Incentive Grant Program fund 50.0% ($238,922) of the eligible project costs ($477,845).

B. PROJECT BACKGROUND

Whitefish Bay Pharmacy by Hayat is proposing to open a pharmacy in the former Fitzgerald Pharmacy space at 424 E Silver Spring Drive, Whitefish Bay, WI 53217. This facility consists of 3,600 sq. feet on the main level. The interior of the existing space will be completely gutted and rebuilt to create a brand new and modern space that still maintains the charm of its predecessor. In addition, Hayat is looking to energize the street life by adding a soda fountain, adding benches outside, removing and replacing the store-front windows with high-efficiency dual-pained glass, and installing exterior signage. In addition, Hayat is seeking to enhance building access for people with disabilities with automatic doors and ADA compliant facilities.

- *Grant Application Type:* Proposal & Negotiated Agreement- *Awarding of funds will be at the discretion of the Village Board based on a recommendation from the CDA.*
- *Project Budget:* $977,9070.00
- *Eligible Project Costs:* $477,845.00
- *Ineligible Project Costs:* $500,062.00
- *Grant Request:* $238,922.00
- *Public/Private Leverage Ratio:* 50.00% Public : 50.00% Private
- *Type of Physical Space Enhancement:* Interior building renovation, exterior building renovations (windows and signage), ADA compliance.
- *Project Schedule:* The estimated project schedule is below. Per the program guidelines, the grant application was submitted prior to any work being started:

Task Name	Duration (Days)	Estimated Start	Estimated Finish
Demo of Current Layout	7	12/23/2019	1/3/2020
Rough Carpentry	7	1/6/2020	1/13/2020
Rough-In Mechanicals	14	1/13/2020	1/27/2020
Insulation, Inspections, Unknowns	7	1/27/2020	2/3/2020
Hang Drywall	7	2/3/2020	2/10/2020
Finish Drywall, Replace Front Windov	7	2/10/2020	2/17/2020
Paint	7	2/17/2020	2/24/2020
Flooring and Ceiling Grid	7	2/24/2020	3/2/2020
Cabinets, Finish Electrical and Plumb	14	3/2/2020	3/16/2020
Move In and Punch List Items	7	3/16/2020	3/23/2020

dates adjusted due to holidays

- *Project Scope:*

  Tenant Buildout

  - Demolition
  - New interior building construction
  - New windows
  - New signage
  - Affixed pharmacy shelving
  - Speaker and Camera System
  - Affixed pharmacy safe
  - Drinking fountain
  - Professional design services

  ADA Compliance

  - New ADA accessible door with openers
  - New ADA compliant bathroom

  Code Compliance

  - New electrical wiring
  - New plumbing
  - HVAC Upgrades

C. APPLICATION REVIEW

The application was received and considered substantially complete. A review of the 12 submittal requirements is below:

1. Completed and signed application form: **COMPLETED**
2. Written project description; include explanation of how the project achieves the goals of the vision for the District, and how this project achieves the funding outcomes outlined in the grant program: **COMPLETED**
3. Itemized list of improvements and project costs (to be provided in addition to the contractor bids): **COMPLETED**
4. Photographs of existing interiors and/or exteriors where improvements will occur: **COMPLETED**

5. Project schedule: **COMPLETED**

6. Completed bids from at least three (3) contractors. Sole source bids for specialized work may be acceptable provided that reasonable attempts were made to obtain additional bids: **SEE BELOW:**

    a. Applicant provided three quotes for general contractor, professional design services, and pharmacy safe.

    b. Sole Source Material Expenses – The applicant noted that the Pharmacy Shelving is a specialized sole-source product ($89,939). This is acceptable to Village Staff.

    c. Sole Source Contractor - Applicant did not receive 3 quotes for the security cameras ($7,261). Applicant noted that all of their stores are on the same system installed by the same company. This is acceptable to Village Staff.

    d. Sole Source Contractor – Applicant did not receive 3 quotes for the Exterior signage ($2,990) and Speaker System ($6,380). It is at the CDA's discretion to decide if these should remain eligible costs.

7. Drawings and/or modified photographs clearly showing proposed improvements, noting what is existing and what is proposed. Drawings and photos should be dated within the past year: **COMPLETED**

8. Executed lease for a commercial space of at least three (3) years, if a tenant: **COMPLETED**

9. If the applicant is a tenant of a commercial space, the property owner must provide written permission and approval: **COMPLETED, SEE BELOW:**

    Moshe Katz, the owner of Atid Properties, has provided a letter of support for the project with the application materials and includes the following statement regarding financing: "As the landlord of this property, we are in agreement of their request for grant dollars from the Village of Whitefish Bay. As an owner of three buildings on Silver Spring, I've repeatedly shown my commitment to investing in my tenants and in Whitefish Bay as part of their greater comprehensive plan for the future."

10. Most recent three (3) years of business tax returns. **SEE BELOW:**

    Applicant stated that because the business has not yet opened and is a new LLC there are no business tax returns. This is acceptable to Village Staff, but it is at the discretion of the CDA to decide if this financial information provides enough detail to fulfill the grant program requirements.

11. Business financial statements, including a current business plan, most recent year-end income statement, and balance sheet. **SEE BELOW:**

    Applicant has provided a business plan as requested. Applicant stated that since the business has not yet opened and is a new LLC there are no financial statements or balance sheets to provide. However, the Applicant has provided a projected income statement and personal financial information (business bank account information) as an alternative. This is acceptable to Village Staff,

but it is at the discretion of the CDA to decide if this financial information provides enough detail to fulfill the grant program requirements.

12. Project-specific sources and uses of funds. For example, list: debt, equity investment by the principal(s), bank loans, grants, or other equity investments. See Evaluation Criteria #9, page 10. **SEE BELOW:**

    Applicant noted the following: "Hayat Pharmacy needs the assistance of the Village of Whitefish Bay to make this happen. We are seeking a grant of 50% of the eligible costs. As co-owners, Hashim Zaibak and Tamir Kaloti are each personally investing $369,492 as a demonstrated commitment to this project." It is at the discretion of the CDA to decide if this financial information provides enough detail to fulfill the grant program requirements.

C. REVIEW & COMMENT FROM THE WHITEFISH BAY BUSINESS IMPROVEMENT DISTRICT

From: Jeff Commer [mailto:jeff@swipeworks.com]

Whitefish Bay Business Improvement District

To: CDA
FROM: BID Economic Restructuring Committee

Based on the grant program criteria, the BID Economic development committee endorses the proposed grant program application for Hayat Pharmacy. We are excited for the potential addition to the district.

Thank you,
Jeff Commer
BID President

E. GRANT EVALUATION CRITERIA

The Downtown Incentive Grant Program establishes ten criteria for the Community Development Authority's review, outlined below.

1. *Is the grant application complete with all required materials?*
   The project materials are substantially complete, except as noted above.

2. *Did the applicant pass the background and credit checks?*
   Will be completed if needed.

3. *Does the proposed project achieve one or more of the funding outcomes of the Downtown Incentive Grant program?*

Yes, the proposed project meets three of the four funding outcomes of the Downtown Incentive Grant program. See below:

- Create engaging spaces, encourage social spaces, and promote pedestrian activity through upgrades to storefronts, façades and streetscape features.
  - Yes, the application does achieve this outcome. The application for the buildout of Whitefish Bay Pharmacy provides an updated façade/storefront (windows, doors, and signage) and the creation of a soda fountain as a new engaging social/pedestrian amenity.

- Attract new businesses and encourage business development that improve the district's retail mix and commercial density through building expansions or interior renovations.
  - Yes, the application does achieve this outcome. Prior to closing, Fitzgerald's was the only pharmacy on Silver Spring Drive. The Whitefish Bay Pharmacy by Hayat will return pharmacy services to the area. In addition, the applicants propose substantive interior renovations.

- Improve accessibility through building and/or site improvements that bring properties up to code for ADA accessibility standards.
  - Yes, the application does achieve this funding outcome. The Applicants propose an ADA restroom and front entry to meet current ADA standards.

- Improve the roofscape of the district through rooftop build-outs and improvements that can create occupiable spaces.
  - No, the application does not achieve this funding outcome.

4. *Is the proposed project located within the Investment Focus Area of the Silver Spring Drive Business District?*

   Yes.

5. *Is the proposed project consistent with the 2016 Silver Spring Drive Master Plan Update?*

   Yes, the application does achieve funding outcomes related to several opportunities and challenges that were identified for the Silver Spring Drive Business District, including:

   - "Increasing building density and the retail, office, and residential footprint within the Silver Spring Drive Business District through redevelopment and revitalization of unoccupied square footage." - The applicant is proposing a tenant build-out of previously vacant space (Fitzgerald's).
   - "Enhancing the brand of Silver Spring Drive as an attractive village center through streetscape improvements, building design, business attraction, and memorable public places." - The applicant is proposing a soda fountain which is a unique business attraction.

- “Maintaining the presence of “daily amenity retail,” - The applicant is proposing a pharmacy that will provide sales of various retail goods in addition to providing medical prescriptions.
- “Improving the exterior and interior conditions of existing buildings recommended for ‘revitalization’ without placing the financial burden on tenants via increased lease rates” – The applicant is making substantial repairs to the interior of the space.

6. *Is the proposed project consistent with the Whitefish Bay BID 2017-2019 Strategic Plan?*

   Yes, this project is consistent with several of the goals of the strategic plan:
   - Diverse business portfolio – The Whitefish Bay Pharmacy by Hayat will fill a void in the current tenant mix of Silver Spring Drive. It will also create a high-activity first-floor retail space.
   - Support local merchants – Hayat Pharmacy is a growing, local, and family-owned Wisconsin pharmacy chain.
   - Attract regional customers – The founding vision of Hayat Pharmacy was to offer innovative pharmacy services that go beyond just filling prescriptions. Some of these services include: free prescription delivery, on-staff translators representing 21 different languages, free in-home pharmacist consultation, medication synchronization, various medication packaging solutions, compounding, safe medication disposal, and community outreach events. These business concepts could draw additional customers away from their usual pharmacy to Silver Spring Drive.

7. *For exterior renovations, is the proposed project consistent with Village of Whitefish Bay Zoning District 11 Site and Building Design Standards?*

   N/A. Minor exterior work will be performed to create an ADA accessible entry and install replacement windows. This work will require permits as required by the Building Services department and must meet the Village of Whitefish Bay Zoning District 11 Site and Building Design Standards.

8. *Will the project leverage private sector investment that would not occur but for the grant?*

   No, the application meets the requirement of a 1:1 public:private leverage ratio, but does not exceed the required grant match.

9. *Does the grant offset a verifiable shortfall in debt and/or equity funds available to the project from the applicant and/or private sector?*

   CDA Discretion; As co-owners, Hashim Zaibak and Tamir Kaloti are each personally investing $369,492 as a demonstrated commitment to this project. The applicants have indicated the grant is an important step to complete the renovation project:

"The cost of developing a pharmacy of this caliber will far surpass the usual costs of building a boilerplate pharmacy. Hayat Pharmacy owes its success, in large part, to fiscal conservatism. We build what we can afford without taking any bank loans. Hayat Pharmacy is proud to be a debt-free company. Without this funding, we will have to severely limit the quality of the finishes and product that we present to the community. Receiving this assistance, in full, from the Village, would make it possible to execute this project in a way that will make the community proud. We anticipate the project will have to be scaled back by 50%, including losing the soda fountain."

The applicant noted that the estimated cost of the soda fountain portion of the project is $76,650.00. It is at the discretion of the CDA to decide if this financial information provides enough detail to fulfill the grant program requirements. As noted above, the applicant has provided business financial account balances to indicate their financial commitment to the business and personal financial situation.

10. *Can the applicant demonstrate strong past business performance and the requisite professional experience to prove project viability?*

    Yes, Hayat Pharmacy has 16 locations in southeastern Wisconsin.

F. RECOMMENDATION

A project of this size is eligible for the Proposal & Negotiated Agreement - Awarding of funds will be at the discretion of the Village Board on a recommendation from the CDA for funding of up to 50% of the total eligible project costs. Based on the review of submitted materials, it is recommended that the CDA consider the following:

- The application has a 1:1 public:private leverage ratio, but does not exceed the required grant match.
- This project is successful in achieving several funding outcomes outlined in the grant program and is in alignment with the plans and vision for the area.
- The BID supports this project.
- The applicant's additional materials attempt to illustrate a gap in project financing. This determination is at the discretion of the CDA.
- The project's projected positive impacts to the District should be considered in relation to the amount of the grant.
- The applicant did receive 3 quotes or provided adequate reasoning for a sole-source provider for a majority of the eligible project expenses. These expenses total $468,475.00.
- The applicant did not receive 3 quotes for eligible project expenses for work that was related to the speaker system and the exterior signage. These expenses total $9,380.00

DOWNTOWN INCENTIVE PROGRAM

Village of Whitefish Bay

WHITEFISH BAY
ESTD PHARMACY 1924
HAYAT

TABLE OF CONTENTS

Completed Application	3
Project Description	6
Itemized List of Improvements and Project Costs	11
Photos of Current Interior Space	13
Project Schedule	17
Contractor Bids	18
Planned Modifications	47
Executed Lease	53
Letter of Support from Building Owner	74
Business Plan	75

DOWNTOWN
INCENTIVE GRANT PROGRAM
Village of Whitefish Bay

Application

APPLICANT NAME: Tamir Kaloti

☒ BUSINESS OWNER (TENANT) ☐ PROPERTY OWNER

PHONE NUMBER: 262-893-2100

E-MAIL: tkaloti@hayatrx.com

CO-APPLICANT NAME: Hashim Zaibak

☒ BUSINESS OWNER (TENANT) ☐ PROPERTY OWNER

PHONE NUMBER: 414-712-5200

E-MAIL: zaibak@hayatrx.com

BACKGROUND & CREDIT CHECK AUTHORIZATION

I, Tamir Kaloti (print name), do hereby give permission for the Village of Whitefish Bay to conduct a background and credit check in relation to my application for a Downtown Incentive Grant. I will provide information that is necessary for the Village to conduct such investigations.

SIGNATURE: Tamir Kaloti

PRINTED NAME: Tamir Kaloti

DATE: 10/15/2019

FOR VILLAGE STAFF ONLY:

COMPLETENESS OF APPLICATION

- ☐ Pre-development Meeting w/ Village staff
- ☐ Application Form & Project Materials
- ☐ Business Operations Information
- ☐ Background Check
- ☐ Credit Check
- ☐ NO fine or tax-related issues

BID REVIEW

- ☐ Review Accomplished
- ☐ Commentary Provided

TYPE OF PHYSICAL SPACE ENHANCEMENT

- ☐ Façade Renovation
- ☐ Interior Building Renovation
- ☐ Upper-story Occupancy
- ☐ Roofscape
- ☐ Larger Improvement Project

DOWNTOWN
INCENTIVE GRANT PROGRAM
Village of Whitefish Bay

Application

The section below refers to the property location of the project within this application.

NAME OF BUSINESS: Whitefish Bay Pharmacy by Hayat

TYPE OF BUSINESS: Pharmacy/Retail

PROPERTY ADDRESS: 424 E. Silver Spring Dr, Whitefish Bay, WI

TOTAL BUILDING AREA (SQ. FT.): 3,600 **(EXISTING)**

TOTAL PROJECT AREA (SQ. FT.)

Building Addition: 0

Interior Renovated Space: 3,600

Exterior Site Modifications: _____

NO. OF FLOORS IN BUILDING: 1 plus basement

CURRENT ASSESSED VALUE OF THE PROPERTY: $ N/A

LEASE EXPIRATION DATE: September 31st, 2042 (includes renewal terms)

PROJECT BUDGET

Complete spreadsheet on next page.

A. Total Project Budget	$ 977,907
B. Total Eligible Costs	$ 477,845
C. Grant Request	$ 238,922

Grant request is 50 % of the total project budget of eligible expenses

HAVE YOU PREVIOUSLY RECEIVED GRANT FUNDING FROM THE VILLAGE?

☐ **YES** When and for how much? _____ ☒ **NO**

APPLICANT SIGNATURE: Tamir Kaloti

APPLICANT PRINTED NAME: Tamir Kaloti

DATE: 10/15/2019

HOW DID YOU HEAR ABOUT THIS GRANT PROGRAM?

Tom Dixon, President at Schwanke-Kasten Jewelers

DOWNTOWN
INCENTIVE GRANT PROGRAM
Village of Whitefish Bay

Application

ITEMIZED LIST OF IMPROVEMENTS AND PROJECT COSTS

Use additional sheets or attachments if necessary

ELIGIBLE EXPENSES		
Description of Work	Cost	Bid or Estimate Provided
See Attachments		☒ Bid ☒ Estimate
		☐ Bid ☐ Estimate
		☐ Bid ☐ Estimate
		☐ Bid ☐ Estimate
		☐ Bid ☐ Estimate
		☐ Bid ☐ Estimate
TOTAL	$477,845	Enter in Box "B," page 15

INELIGIBLE EXPENSES		
Description of Work	Cost	Bid or Estimate Provided
See Attachments		☒ Bid ☒ Estimate
		☐ Bid ☐ Estimate
		☐ Bid ☐ Estimate
TOTAL	$500,062	May be used to calculate "Total Project Budget," Box "A," page 15

PROJECT DESCRIPTION

Hayat Pharmacy is proud to present the build out plans and improvement concepts for the former Dan Fitzgerald Pharmacy space. We are requesting a grant in order to achieve the vision and goals for the beautification and improvement of the neighborhood-based business corridor of E. Silver Spring Dr.

HAYAT PHARMACY

Hayat Pharmacy is a growing, local family-owned community pharmacy chain. Hayat Pharmacy started in 2011 as one pharmacy location. The founding vision was to offer innovative pharmacy services that go beyond just filling prescriptions. Some of these services include free prescription delivery, on-staff translators representing 21 different languages, free in-home pharmacist consultation, medication synchronization, various medication packaging solutions, compounding, safe medication disposal and community outreach events. In addition, Hayat Pharmacy works with communities to improve health outcomes in differentiated ways. For example, Hayat Pharmacy worked with the Milwaukee Fire Department to lower the number of 911 calls to the department.

Execution of this vision has led to tremendous success and national accolades. Hayat Pharmacy has now grown to 16 pharmacy locations in Milwaukee and the surrounding area dispensing hundreds of thousands of prescriptions annually. Hayat was awarded one of the Top Places to Work in 2015 by the Milwaukee Journal Sentinel, was recognized as Pharmacy of the Year in 2014 by McKesson Corporation and was named Pharmacy of the Year in 2014 by Pharmacy Development Services. Hayat Pharmacy has been featured in many local and national media publications including WISN12, WTMJ4, FOX6, CBS58, Milwaukee Journal Sentinel, BizTimes Milwaukee, Pharmacy Today, Consumer Reports, Forbes and more.

SEEKING TO REOPEN A COMMUNITY PILLAR

Hayat Pharmacy is seeking to reopen a pharmacy at the former Fitzgerald Pharmacy space to be called Whitefish Bay Pharmacy. The project meets the vision and goals the Silver Spring Drive Business District as it seeks to reopen a business that was a longstanding community pillar. In addition, the project seeks to create an engaging space that was, for generations, at the center of the Village's social and community exchanges and generated significant pedestrian traffic on Silver Spring Drive.

The former Fitzgerald Pharmacy closed its doors on August 26, 2019 after being in business for 65 years. This was a monumental loss to the community. Many members of the community expressed sadness, outrage and frustration over the closing of the pharmacy. Shortly before the closing, former owner, Mike Pistiner, told CBS 58 News, "[There is] a ton of emotion that's flowing into the store. People are sad, but they're very appreciative for what we had." The closing of the pharmacy generated significant local media attention attesting to the significance of the event. Some outlets called it "the end of an era."

There is no shortage of testimonials: "It's a fixture in the community, everybody knows Fitzgerald's, everybody comes here for all sorts of things," Whitefish Bay resident John Powers said. "We are losing all the personal touch that Fitzgerald's gives you," longtime customer Nancy Burke said. The counters at Fitzgerald Pharmacy hold 65 years of memories. In fact, many people grew up visiting the pharmacy. "It's that go-to place," said Michael Tarney, a longtime customer.

The news was heartbreaking for lifelong customers like Cathy Demuth, who had tears in her eyes after hugging one of the pharmacists goodbye. Demuth said her insurance company once required her to fill her prescription at a different pharmacy. When that other pharmacy gave her the wrong medication, she begged her insurance company to let her go back to Fitzgerald's. "It's family," she said. "I walk in, and they bring me my bag. They don't have to ask my name." Many said they worked at the pharmacy during high school or during college. One longtime customer said the closure isn't only a big loss for him, but for the Village of Whitefish Bay, as well.

Maureen O'Grady, a resident of Whitefish Bay, said she would take her 4-year-old kindergarten students from Richards Elementary School to visit Fitzgerald's on field trips. She said the staff always made time to talk to the kids about their work. "There will be a hole on Silver Spring as well as a hole in our hearts," she said.

OPPORTUNITY

Hayat Pharmacy and the Village of Whitefish Bay are presented with a unique, once in a generation, opportunity to restore a community pillar. Hayat Pharmacy fully plans to hire the former Fitzgerald staff and has already extended offers to a number of staff members. Hayat Pharmacy is seeking to revive the familiar and attentive customer service and differentiated services that the community members already deeply miss.

Hayat Pharmacy needs the assistance of the Village of Whitefish Bay to make this happen. We are seeking a grant of 50% of the eligible costs. As co-owners, Hashim Zaibak and Tamir Kaloti are each personally investing $369,492 as a demonstrated commitment to this project. Since this is a new business entity and has not yet been in operation, there are no business tax returns, income statements, or balance sheets. We have provided a bank statement showing the owners' investment into the newly formed business account, as well as, a projected income statement.

We are attempting to build a brand new, well designed, well laid out, high quality facility with high level finishes to reinstitute this pharmacy in the best possible fashion. We're looking to energize the street life by removing and replacing the store-front windows with high efficiency dual-pained glass, replacing front entry door, paint store front, add benches outside, and installing exterior signage. The additions and improvements to the new store front will attract and engage the community with new amenities and social spaces. In addition, we are seeking to enhance building access for people with disabilities with automatic doors and ADA compliant facilities.

The existing space will be completely gutted to the bones of the building and rebuilt to create a brand new and modern space that still maintains the charm of its predecessor. The cost of developing a pharmacy of this caliber will far surpass the usual costs of building a boilerplate pharmacy. Hayat Pharmacy owes its success, in large part, to fiscal conservatism. We build what we can afford without taking any bank loans. Hayat Pharmacy is proud to be a debt-free company. Without this funding, we will have to severely limit the quality of the finishes and product that we present to the community. Receiving this assistance, in full, from the Village, would make it possible to execute this project in a way that will make the community proud. We anticipate the project will have to be scaled back by 50%, including losing the soda fountain.

Independent pharmacies have frequently closed their doors over the last ten years. The local Milwaukee and surrounding area communities are no different. Former owner of Fitzgerald's, Mike Pistiner wrote in his closing letter to the community that "There [have] been major changes in pharmacy, and in all health care, that affects these elements of service, commitment, and dedication that each of you truly expect and deserve. It is simply not financially feasible to maintain Fitzgerald Pharmacy to the standards that we have built this business on."

Despite industry challenges, Hayat Pharmacy has demonstrated its ability to be successful in this changing landscape. Hayat Pharmacy has grown to 16 pharmacy locations in Milwaukee and the surrounding area since 2011 and dispenses hundreds of thousands of prescriptions annually. Hayat Pharmacy's success is becoming increasingly well known in the community and nationwide. With each of many features in local and national pharmacy and community newsletters, as well as, local and national awards, Hayat Pharmacy continues to strive for excellence in meeting patient needs and improving health care. Hayat Pharmacy is looking forward to partnering with the Village of Whitefish Bay to reopen a community pillar that has left a void in the community's offering. Without the Village's full assistance, we will not be able to recreate this community gem.

Without the full support for our grant request of 50% of the eligible costs, the scope of the project will severely diminish. The biggest loss would be the old-fashioned soda fountain. The high-quality finishes we're currently planning for will have to be removed from the current plan and replaced with standard shelving, lighting fixtures, flooring and decor. Since the business will be privately funded by Hashim and Tamir, the grant will fill the shortfall so we can create a warm and welcoming space for the community.

Sources and Uses of Funds

Sources	
Village of Whitefish Bay	238,922
Tamir Kaloti	369,492
Hashim Zaibak	369,492
Total Sources	**977,907**

Eligible Project Costs

Item description	Cost
Construction	
General: Clean,Dump,Fence,Ins,Mgr	24,460
Concrete: New Walk/Stone Patch	5,795
Metals: Structural Steel	2,000
Wood & Plastics: Demo/New Walls/Blocking	32,935
Thrml & Moisture: Insulation/Roof patch	5,700
Doors & Windows: New Pella/Doors	29,050
Finishes: Drywall/Paint/Ceilings/Flooring	54,887
Specialties: Restroom Acc. & Fire Ext.w/ cabinet	2,000
Mechanical: HVAC, Plumbing	21,908
Electrical: Power & Data (NIC data homerun)	35,215
Electrical additions	5,000
Stone/brick wall interior	20,000
Complete soffit removal	2,000
New janitor closet	1,500
Drinking fountain	4,000
Rear entrance upgrade	12,500
Drywall	5,000
HVAC upgrades	15,000
Light fixture upgrades	5,000
Cabinetry (affixed)*	15,000
Shelving installation	7,500
Soda fountain tile floor	7,500
CM/Admin/P&O	28,258
Paragon Solutions Design Services	22,500
Pharmacy shelving (affixed)*	89,939
Exterior sign	2,990
Speaker system	6,390
ADA automatic door opener (2)	4,180
CII Pharmacy Safe (affixed)	2,377
Security cameras	7,261
Total	**477,845**

**specialized item*

Ineligible Project Costs

Item description	Cost
HealthMart Franchise Fee	6,000
Grand Opening Marketing	10,000
Pharmacy management system (Pioneer RX)	14,888
Permits	3,500
Phone system	2,645
WE Energies deposit	1,824
Working capital	100,000
Inventory	250,000
AAPA membership	1,000
Pharmacy licensing	10,000
Permits and Fees	3,500
Legal fees	15,000
Accounting fees	5,000
Medical Waste Bins	197
Technology firewell and networking setup	2,083
Logo mats	1,809
Sliding Glass Door Reach In refridgerator	3,616
Two reach in refridgerators and one freezer	15,000
Stools, seating/conversation area, outdoor café table, chairs and bench	10,000
Interior Signage	2,000
Door Signage	2,000
Computer system and eqipment	15,000
Contingency	15,000
Chairs and tables for ice cream parlor	10,000
Total	**500,062**

Total Uses of Funds	**977,907**

fitzgerald
pharmacy

Task Name	Duration (Days)	Estimated Start	Estimated Finish
Demo of Current Layout	7	12/23/2019	1/3/2020
Rough Carpentry	7	1/6/2020	1/13/2020
Rough-In Mechanicals	14	1/13/2020	1/27/2020
Insulation, Inspections, Unknowns	7	1/27/2020	2/3/2020
Hang Drywall	7	2/3/2020	2/10/2020
Finish Drywall, Replace Front Windov	7	2/10/2020	2/17/2020
Paint	7	2/17/2020	2/24/2020
Flooring and Ceiling Grid	7	2/24/2020	3/2/2020
Cabinets, Finish Electrical and Plumb	14	3/2/2020	3/16/2020
Move In and Punch List Items	7	3/16/2020	3/23/2020

dates adjusted due to holidays

11/27/2019
Hayat - Whitefish Bay
3310 sqft
$108.97 /sqft

AMERICAN COMPANIES
DESIGN | BUILD | DEVELOP | REAL ESTATE

No.	Division:	Description:	Notes:	Cost Estimate:
#01	General:	Clean,Dump,Fence,Ins,Mgr		$24,460.00
#02	Site Construction	none		$0.00
#03	Concrete	New Walk/Stone Patch		$5,795.00
#04	Masonry	none		$0.00
#05	Metals	Structural Steel		$2,000.00
#06	Wood & Plastics	Demo/New Walls/Blocking		$32,934.95
#07	Thrml & Moisture	Insulation/Roof patch		$5,700.00
#08	Doors & Windows	New Pella/Doors		$29,050.00
#09	Finishes	Drywall/Paint/Flooring		$54,887.00
#10	Specialties	Restroom Acc. & Fire Ext.w/ cabinet		$2,000.00
#11	Equipment			$0.00
#12	Furnishings	Cabinets: see below		$0.00
#13	Special Construction			$0.00
#14	Conveying			$0.00
#15	Mechanical	HVAC, Plumbing		$21,908.00
#16	Electrical	Power & Data (NIC data homerun)		$35,215.00
#17	Allowances			$118,500.00
		Local Permits/Fees		$2,500.00
		Sate Permits/Fees		$1,000.00
		Electrical Adds		$5,000.00
		Stone/Brick wall interior		$20,000.00
		complete soffit removal		$2,000.00
		new janitor closet door		$1,500.00
		Drinking Fountain		$4,000.00
		Rear Entrance upgrade		$12,500.00
		Dryfall		$5,000.00
		HVAC upgrades		$15,000.00
		Light fixture upgrades		$5,000.00
		Cabinetry		$15,000.00
		shelving installation		$7,500.00
		Additional Contingency		$15,000.00
		Soda Fountain Tile Floor		$7,500.00
	Sub-Total:			$332,449.95
	CM/Admin/P&O:	8.50%		$28,258.25
	Sub-Total:			$360,708.20
	Owner Contingency:	0%		$0.00
	Total Cost Estimate:			**$360,708.20**

SALOUS CONSTRUCTON
MANAGEMENT

3861 S 60
Milwaukee, WI 53220

Estimate

Date	Estimate #
12/8/2019	46

Name / Address
Hayat Pharmacy Whitefish Bay branch 807 W layton Ave Milwaukee, WI 53221

Project

Description	Qty	Rate	Total
Demo interior labor		14,500.00	14,500.00
10 dumpsters		4,250.00	4,250.00
Drawings and plans		4,500.00	4,500.00
Labor:Wall framing, blocking, door frames installation		14,300.00	14,300.00
Metal studs and lumber		8,900.00	8,900.00
Electrical & Lighting		36,000.00	36,000.00
Plumbing		18,200.00	18,200.00
Heating & Cooling new Roof Top unit 5 tons		25,000.00	25,000.00
drywall Labor and material		21,000.00	21,000.00
material cost :Doors & Frames and Hardware		11,600.00	11,600.00
Cabinets & Vanities		19,500.00	19,500.00
Shelving Uniweb		19,500.00	19,500.00
commercial safe		4,500.00	4,500.00
Painting		13,000.00	13,000.00
bathroom fixtures		3,600.00	3,600.00
Camera System		6,500.00	6,500.00
Ceilings & Coverings 2 by 2 grid, revealed edge premium tile		16,000.00	16,000.00
Floor Coverings		21,000.00	21,000.00
Store front replacement		13,000.00	13,000.00
Site clean up		3,200.00	3,200.00
construction management @12%		33,366.00	33,366.00
		Total	$311,416.00

PROPOSAL

TO:	**chelsea** Hayat Phamacy	Project: Address:	424 w Silverspring Drive ,
		Date:	10/18/2019

We propose to furnish all materials, equipment, and labor, subject to any exclusions listed below, required to complete the following:

1. Architectural Plans, $5,250.00

Description of Services:
cost to have plan set generated for submittal to city for review and issuance of permits

2. Permits and Plan review $1.00

Description of Services:
TBD change order will be supplied for this phase

3. Demolition $7,050.00

Description of Services:
remove all drywall to studs
remove all floor coverings
remove raised floor
partially remove soffits along east and west walls
remove all ceiling tiles (keep the grid in place)

4. Framing/Carpentry $2,775.00

Description of Services:
Build half walls in front of pharmacy, along the side of the soda fountain, check out counter and around seating.
Dimensions to be confirmed by owner and according to engineer plan
Install drop ceiling grid over the soda fountain area

5. Plumbing **$22,500.00**

Description of Services:
Create new ADA compliant bathroom
install one sink in pharmacy area
Install triple sink for soda fountain
Supply and install new toilet
Supply and install new bathroom sink
all waterlines to be pex, waste and vent to be pvc
floor will have to be opened

6. Electrical **$17,950.00**

Description of Services:
Install 3 GFCI's 1 outside
Install 16 duplex outlets
Install 4 dedicated duplex switches for back door, fountain lights and ceiling fixtures
Install exhaust vent in bathroom
Lighting allowance of $3500 included

7. HVAC **$3,000.00**

Description of Services:
Install new heat run and cold air return in new bathroom

8. Laminate or vinyl plank Flooring Install **$18,116.97**

Description of Services:
Basic labor to install laminate flooring with favorable site conditions.
Measure and layout seam locations.
Install underlayment.
Cut, fit and secure laminate flooring.
Includes planning, equipment and material acquisition, area preparation and protection, setup and cleanup.
allowance of 1.69 per square foot

9. Drywall Install With Finish **$6,047.90**

Description of Services:
Basic labor to install drywall with favorable site conditions.
Layout, fabricate and fit drywall sheets.
Secure to framing per manufacturer specifications.
Includes planning, equipment and material acquisition, area preparation and protection, setup and cleanup.

10. Interior Painting **$10,717.56**

Description of Services:
Basic labor to paint home with favorable site conditions. Prep up to 3 hr per 100 SF - clean,

scrape, sand and patch up to 4 defects per 100 SF. Caulk gaps and spot prime. Roll /brush/Spray 2 coats of paint over ceiling/walls. Paint up all doors and door trim, baseboard trim per room. Includes planning, equipment and material acquisition, area preparation and protection, setup and cleanup. Covers three colors/paint: walls, trim, Ceiling grid

11. Countertops **$2,250.00**

Description of Services:
Install custom high definition laminate counter tops at pharmacy half wall, check out soda fountain and consult counter

12. drop ceiling grid install and ceiling panels **$6,175.00**

Subtotal:	**$101,833.43**
**0% Tax:*	*$0.00*
TOTAL:	**$101,833.43**

Terms and Conditions

Commencement: Work will start after (1) XL Property & Contracting LLC has received a signed contract; 15% deposit **made payable to: XL PROPERTY & CONTRACTING LLC** with progress payments to follow and final payment due immediately upon completion (3) proof of Owner's ability to pay contracted amount is given to XL Property & Contracting LLC; (4) all governmental permits/approvals necessary for the Work are issued, if applicable; (5) Final selections for finish have been made and approved by Owner; (6) Signed and Dated "approval to construct", letter from the landlord (if property is leased by owner) .
Substantial Completion: Substantial Completion means the Work will be ready for use for the purpose for which it was intended and /or the occupancy permit or other government approval, if required, is issued, whichever occurs first. Substantial Completion can be reached even though punch list items may then be outstanding and warranty periods may not have expired.

LIEN NOTICE/
AS REQUIRED BY WISCONSIN CONSTRUCTION LIEN LAW, XL Property & Contracting LLC HEREBY NOTIFIES OWNER THAT THOSE FURNISHING CONSTRUCTION LABOR OR MATERIALS MAY HAVE LIEN RIGHTS ON OWNER'S LAND AND BUILDINGS IF NOT PAID. THOSE ENTITLED TO LIEN RIGHTS, IN ADDITION TO XL Property & Contracting LLC, ARE THOSE WHO CONTRACT DIRECTLY WITH OWNER AND SUBCONTRACTORS WHO GIVE THE OWNER NOTICE WITHIN SIXTY DAYS AFTER THEY FIRST FURNISH LABOR OR MATERIALS FOR THE WORK. ACCORDINGLY, OWNER WILL PROBABLY RECEIVE IDENTIFICATION NOTICES AND SHOULD GIVE A COPY OF EACH TO OWNER'S MORTGAGE LENDER, IF ANY. XL Property & Contracting LLC AGREES TO COOPERATE WITH OWNER AND ANY SUCH LENDER TO SEE THAT ALL POTENTIAL LIEN CLAIMANTS ARE PAID AMOUNTS DUE.
NOTICE CONCERNING CONSTRUCTION DEFECTS
WISCONSIN LAW CONTAINS IMPORTANT REQUIREMENTS YOU MUST FOLLOW BEFORE YOU MAY FILE A LAWSUIT FOR DEFECTIVE CONSTRUCTION AGAINST THE CONTRACTOR YOU CONSTRUCTED YOUR DWELLING OR COMPLETE YOUR REMODELING PROJECT, OR AGAINST A WINDOW OR DOOR SUPPLIER OR MANUFACTURER. SECTION 895.07 (2) AND (3) OR THE WISCONSIN STATUTES REQUIRES YOU DELIVER TO THE CONTRACTOR A WRITTEN NOTICE OF ANY CONSTRUCTION CONDITIONS YOU ALLEGE ARE DEFECTIVE BEFORE YOU FILE YOUR LAWSUIT, AND YOU MUST PROVIDE YOUR CONTRACTOR, OR

WINDOW OR DOOR SUPPLIER THE OPPORTUNITY TO MAKE AN OFFER TO REPAIR OR REMEDY THE ALLEGE CONSTRUCTION DEFECT. YOU ARE NOT OBLIGATED TO ACCEPT ANY OFFER MADE BY THE CONTRACTOR OR WINDOW OR DOOR SUPPLIER. ALL PARTIES ARE BOUND BY APPLICABLE WARRANTY PROVISIONS. (THE RIGHTS AND RESPONSIBILITIES UNDER WISCONSIN'S "RIGHT TO CURE" LAWS ARE DISCUSSED MORE THOROUGHLY IN THE ATTACHED EXHIBIT "A".)

CONTRACT TERMS AND CONDITIONS

1. **Plans and Specifications**. The final plans and specifications from which the Work will be constructed are attached to this Contract and signed by the Owner. The Re-modeler has sole control of construction methods, sequence of Work and coordination of its subcontractors to perform the construction identified in the plans and specifications Changes due to hidden conditions necessary to properly complete the Work which are not identified in the plans or specifications will be paid by the Owner as an extra at XL Property & Contracting LLC's cost plus 20%. Dimensions shown are approximate and subject to field verification. Any products or design details contained in any plans or drawings pertain to the Work may not be an exact depiction of the products and design details actually used to complete the Work. If plans and specifications conflict, the specifications control.

2. **Materials**. To the extent not fully identified in the Specifications, the Owner will make selections of all materials, appliances, colors, finishes, and allowance items within times established by XL Property & Contracting LLC or a day for day extension of the date for Substantial Completion will be made until such selections are made. Owner acknowledges that XL Property & Contracting LLC has the right to substitute material sizes, brand names or other features that will perform equal to or better than those specified or selected. XL Property & Contracting LLC will make reasonable efforts to use materials (which may be obtained locally) to match existing construction, however, Owner understands that the natural characteristics of building material may result in color, texture and finish variations, and that perfect matches are not guaranteed. Building material imperfections are within industry standards for acceptable inconsistencies. Any excess material delivered to the Project Site and not needed to complete the Work will remain the property of XL Property & Contracting LLC.

3. **Owner Duties**. The Owner will timely provide at Owner's expense, and is solely responsible throughout performance of the Work for: (a) unobstructed access to the Project Site from 7:00am to 7:00pm, seven days per week, including removal of any existing hazardous materials, such as asbestos, lead, PCBs, or other environmental hazards, including, but not limited to, mold, mildew, fungi or other similar microbial conditions, as well as keeping children and pets away from the Work area; (b) identification of private utility connections and locations and arranging for any relocation of utilities; (c) providing electricity, water, telephone and toilet facilities for use by XL Property & Contracting LLC and its subcontractors; (d) an accurate survey location any existing above ground and underground structures in or near the Work area and easements of other site restrictions, if requested by XL Property & Contracting LLC, (e) secure storage for XL Property & Contracting LLC and its subcontractors' materials and equipment necessary to complete the Work, (f) removal, protection and re installation of Owner's personal property, (g) unless otherwise provided in the description of the Work or if resulting from XL Property & Contracting LLC's negligence, repair of access routes used by construction equipment; finish grading and seeding; landscaping; walks, steps and driveways; septic tanks; and any utility lines damaged during performance of the Work; (h) moisture control and regular maintenance of the completed Work; (i) allowing XL Property & Contracting LLC and XL Property & Contracting LLC employees to manage and conduct the Work in accordance with the terms of this contract without undue interference, provided, however, that Owner is encouraged to discuss issues relating to the Work with his or her salesperson or, if none, with an employee of XL Property & Contracting LLC for such purpose; and (j) obtaining all government permits/approvals necessary for the Work.

4. **Hazardous Material**. If a hazardous material, such as asbestos, lead, PCBs, or other environmental

hazard, such as mold, mildew, fungi or other similar microbial conditions, is discovered at the Project Site, XL Property & Contracting LLC will not be obligated to commence or continue work until such material or hazard has been removed at Owner's expense or rendered or determined harmless by a certified, independent, testing laboratory at Owner's expense. Unless caused by the negligent acts or omissions of XL Property & Contracting LLC, the Owner shall indemnify and hold XL Property & Contracting LLC harmless from and against any and all claims, damages, losses, costs and expenses, including attorney's fees, arising out of or relating to the performance of the Work in any area of the Project Site affected by hazardous material or other environmental hazards. A day for day extension of the date for Substantial Completion will be made until such removal or determination of harmlessness.

5. **Insurance**. Owner will maintain property insurance and assume all risk of loss during performance of the Work for Project Site physical losses, include basement collapse, fire, wind damage, theft and vandalism. XL Property & Contracting LLC will maintain general liability insurance covering performance or arising out of the Work, other than loss of use damages. Certificates evidencing insurance coverage shall be conveyed by Owner and XL Property & Contracting LLC before Commencement of the Work.

6. **Payments**. Upon receipt of an invoice, Owner will make full payment of the invoiced amount within five (5) business days, including amounts requested for extras or allowances. Extras will be invoiced before the additional Work is performed. Payment for overages on allowances will be invoiced at the time each such item is selected. Credit for underage on allowances will be separately identified and deducted from the Final Payment invoice amount. Owner shall pay a finance charge calculated at the rate of 2% per month (pro-rated for partial months) on all past due amounts, plus all costs of collection, including attorney fees. If requested by Owner, payments will be exchanged for lien waivers from XL Property & Contracting LLC for the portion of the Work for which payment is made. No amount may be withheld from Final Payment to address punch lists items unless agreed to by XL Property & Contracting LLC, in which case, XL Property & Contracting and Owner will set a date by which each of such items will be completed and related payment will be made by Owner. Final Payment will waive all claims by Owner, except subsequent lien or warranty claims.

7. **Changes**. Changes to the plans and specification will be made upon written Change Order executed and fully paid by Owner in advance of the changed Work being performed, except that XL Property & Contracting LLC is entitled to Change Orders without advance Owner approval if required to address hidden conditions, to stop and restart Work after identification and removal of environmental hazards of as a result of delay, or to conform to changes in building codes or zoning after execution of this Contract. Change Orders will identify the change in the Work which will be added or deleted, the cost for the change or method for calculating the cost, and the number of additional days, if any, for XL Property & Contracting LLC to achieve Substantial Completion.

8. **Delays**. If XL Property & Contracting LLC is prevented from completing the Work due to delays of the Owner supplying information, materials to be incorporated into the Work in timely making payments; delays of governmental authorities or third parties; delays due to adverse weather conditions, delays due to Owner's removal or investigation of hazardous materials or environmental hazards, damages arising from vandalism or fire, or as a result of any other conditions not caused by XL Property & Contracting LLC, then XL Property & Contracting LLC shall be entitled to an equitable adjustment of the number of days to achieve Substantial Completion plus a reasonable period for rescheduling and setup of its subcontractors, as well as any costs arising from such a delay, including increased material or labor time costs, as an extra. For each such delay, or for each delay in the aggregate such as adverse weather conditions, XL Property & Contracting LLC shall convey a Change Order to Owner identifying the number of days and costs attributable to the delay. Evidence of such additional costs shall be supplied by XL Property & Contracting LLC to Owner upon request. If the

Owner halts construction of the Work for Owner's convenience of fails to make the Project Site available for a period of thirty days or more, then XL Property & Contracting LLC at its option and upon written notice to the Owner, may terminate this Contract and receive compensation as provided in Paragraph 10 below.

9. **Warranty**. XL Property & Contracting LLC warrants that all Work performed under this contract will be free from defects for a period of one (1) year from the date of Substantial Completion. NO WARRANTY AVAILABLE ON ROOF REPAIRS WITH MORE THAN 1 LAYER OF ROOF SHINGLES. This limited warranty of Owners' exclusive remedy against XL Property & Contracting LLC, is conditioned upon Owners conveyance of Final Payment to XL Property & Contracting LLC, and ends upon Owner's sale or other conveyance of Project Site. The warranty does not cover, and XL Property & Contracting LLC has no responsibility for, any (a) items covered under subcontractors' or manufacturers' warranties conveyed to Owner as part of the Work, (b) items not installed or repaired by XL Property & Contracting LLC or its subcontractors, (c) ordinary use of failure by Owner to properly maintain the Work, (d) damage by exposure to weather conditions, including expansion or contraction of natural building materials, and for (e) incidental or consequential damages of any kind. As a condition of the Contract Price, all implied warranties, including fitness and habitability, are waived. XL Property & Contracting LLC shall perform warranty repairs or replacements, at its option, within a reasonable period of time after notice from Owner during the warranty period. Copies of any subcontractor or manufacturer warranties for items identified in the Work specifications at the time this Contract is executed will be made available for Owners review upon request during performance of the Work and a copy of each will be given to Owner in exchange for Final Payment.

10. **Termination**. Owner has the right to unilaterally cancel performance of this Contract by notifying XL Property & Contracting LLC within three (3) business days after executing this Contract. If Owner terminates the Contract at any time afterward, XL Property & Contracting LLC will be entitled to retain all Payments made before the date of notice of termination, compensation for all other portions of the Work properly performed by XL Property & Contracting LLC, and 30% of the total Contract Price for XL Property & Contracting LLC's overhead costs.

11. **Marketing**. Owner agrees to allow XL Property & Contracting LLC to display its sign on the Project Site, provided such display does not violate any subdivision covenant, municipal ordinance, or other applicable law. Owner agrees to allow XL Property & Contracting LLC, or an agent thereof, to take photographs of the Project Site before, during, and after completion of the Work and to use such photographs in XL Property & Contracting LLC marketing and promotional materials, without limitation. Owner shall not be entitled to any compensation for XL Property & Contracting LLC's display of its sign on the Project Site or for the use of such photographs in XL Property & Contracting LLC marketing and promotional materials.

12. **Concurrent Projects**. Owner may not contract with any other individual or business to perform any construction work at the Project Site during the term of the Contract unless XL Property & Contracting LLC has given its prior, written consent, which shall not be unreasonably withheld.

13. **Project Site Conditions**. Owner acknowledges that XL Property & Contracting LLC performance of the Work will necessarily involve the production of dust, debris, and noise at the Project Site. XL Property & Contracting LLC agrees to attempt to keep noise and disruption to a reasonable level for the Work being performed at the Project Site.

Contractor: *Al Cole* 10/18/2019

XL Property & Contracting LLC Date

ACCEPTANCE OF PROPOSAL: The above prices, scope, specifications and conditions are satisfactory and hereby accepted. You are authorized to do the work specified.

Client: _____ _____

Hayat Phamacy Date

Cost Proposal

Date: 10/18/19

Customer: Hayat Pharmacy
Attn: Tamir Kaloti
8500 W. Capitol Drive
Milwaukee, WI 53222

PROJECT SITE VISIT:

- Meet with Stakeholders
- Detailed Review of Overall Project Goals & Objectives
- Site Survey of Existing Conditions
- Documentation of Existing Conditions

Fee: $1,750/day plus $1,000 travel expenses = *$ 2,750.00

Initial to Approve_____

DESIGN DEVELOPMENT:

- Store Planning
- Store Layout
  - Fixture/Equipment Plan
- Lighting Design
- Interior Design
  - 2D Color Renders
  - All Materials, Finishes & Specifications
- Signage, Graphics and Décor

Flat Fee: $22,500, less Healthmart Discount of $7,500 = $15,000 due
***50% down payment required** **Initial to Approve_____**

***Total Down Payment $10,250**

_____ 10/18/19

Paragon Solutions *Date*

_____

Hayat Pharmacy *Date*

DESIGN, PROJECT MANAGEMENT, AND RETAIL FURNITURE/FIXTURE BUDGET

Description	Quantity	Unit Price	Cost
INELIGIBLE EXPENSES			
Material allowance for retail shelves, Pharmacy Shelves and perimeter pipe and wood shelving			$16,500
Material allowance for Commercial Refrigeration including dipping cabinet, carbonated water dispenser, and 2 Reach in Refrigerators and 1 Freezer			$15,000
Material allowance for counter stools, seating in waiting/conversation			$1,500
Total Ineligible Expenses			**$33,000**
Description	**Quantity**	**Unit Price**	**Cost**
Outdoor seating allowance			$1,000
Design and outfitting service, including selections for all finish materials, paint, display items and furniture - $3 per square foot (based on 3000 square feet) - LilliLu Design			$9,000
Project Management and Supervision - LilliLu Design - 2% of overall cost			$6,000
TOTAL ELIGIBLE EXPENSES			**$16,000**

Jesse Miller
5563 Painter Green
San Antonio, TX 78240
(828)553-2248

Hayat Pharmacy Renovation

October 14, 2019

OVERVIEW

This document outlines the fees and associated costs to complete the schematic design, renderings, and limited construction administration necessary to guide project through construction. It is assumed the owner will provide all necessary information, and adequate personnel to Jesse Miller to complete all appropriate tasks for design and construction of this project. The costs outlined within this proposal are estimates; it is reasonable to assume there may be additional fees required by Jesse Miller for services provided during the course of design & construction due to unforeseen conditions, owner requests, contractor requests, or other things that are necessary to complete the project that are not outlined within the scope of the design professional.

DELIVERABLES

1. Completed Schematic Design Documents illustrating design intentions (limited details will be provided based upon the design professional's discernment of what is needed to guide contractor in construction).
    a. Floor Plans - With dimensions and notes regarding items within
    b. Floor Finish Plans
    c. Interior Elevations
2. No less than 2 rendered images illustrating design intention for owner and contractor use
3. Generic Finish Selections - To be finalized during construction submittal process
4. Generic review of submittals/ shop drawings/ other construction based documents as they relate to compliance with design.

EXCLUSIONS - LIMITATIONS OF LIABILITY

It is the responsibility of the owner to confirm with all appropriate governing bodies that the documents provided do not require the seal or supervision of a licensed Architect or Engineer. The selected contractor will maintain all liability for adherence to code and governmental

regulations associated with the project. Jesse Miller will, within his abilities, make educated efforts to adhere to all governing codes, regulations, and design practices observed within the state and region of the project. The owner agrees to hold harmless Jesse Miller, & waive all liability associated with the means and methods of construction as well as any contractual obligations made by contractor.

FEES

Design

Completion of design with aforementioned documents:

@ $200/Hr - Minimum 20 Hrs :

$4,000

Additional Services Relative to Design: @ $200/Hr - (To be approved by owner before proceeding with work)

Design Site Visits - with associated fees

Flights: NTE $800 Roundtrip

Rental Car: NTE $100/Day (assumed 3 days each visit) includes insurance & applicable fees

Hotel: NTE $150/Night (Assumed 2 nights each visit)

Total Per Visit: **$1,400**

Suggested 3 site visits for the following: PreDesign/Owner meeting, Pre-Construction, Final Punch

Total for assumed Site Visits:

$4,200

Construction Administration

Contractor Selection with Owner: 3 hours @ $200/Hr = **$600**

Submittal and Contractor Provided Document Reviews: 10 Hours @ $200/Hr = **$2,000**

Contingency @ 15% = **$390**

Total estimated fees for Construction Administration:
$2,990

BAUER Sign & Lighting COMPANY
2500 South 170th Street
New Berlin, Wisconsin 53151
wire bauersignusa.com
voice 262.784.0500

PROPOSAL/CONTRACT

DATE *10/22/2019* PHONE/FAX *414-246-9801*
CUSTOMER(BUYER) *Hyat Pharmacy Attn: Tracy Levar*
ADDRESS *8500 W Capitol Drive*
CITY, STATE *Milwaukee, WI* ZIP *53222*
JOB NAME *Hayat Pharmacy WFB*
ADDRESS *424 E Silver Spring Dr*
CITY, STATE *Whitefish Bay WI* ZIP *53217*
EMAIL: tlevar.hayat@gmail.com

BAUER SIGN COMPANY WILL SUPPLY LABOR MATERIALS & NECESSARY EQUIPMENT TO PERFORM THE FOLLOWING:

Fabricate a new custom sign per specifications and site visit
Custom aluminum cabinet fabricated sized: 30" H x 103" L
All text to be 1/4" Aluminum plate letters
Painted per color scheme
Installed by Bauer Sign and Lighting
Price: $2,990

1.) Permit acquisition fee (Add $290.00) 2.) Sign permit billed at cost (Add est $XXX.XX)
3.) State / county sales tax (5.6 %)
4.) $1,445 deposit due to execute agreement 5.) Balance is due and payable at time of delivery
6.) Installation to be performed 6 weeks from date of permit acquistion.

Installation timeframe is determined by procurement dates of any/all regulatory permits. Per this agreement, final payment is due at time of delivery and is not contingent upon availability of primary power / final connections.

Please allow *6-8* **week(s) for installation. Install date is contingent upon customer and city approval and receipt of deposit.**
Additional foundation costs incurred as a result of abnormal soil conditions, rock, water intrusions and/or underground obstructions will be billed additionsl to the amount of this contract. IT IS EXPRESSELY AGREED AND UNDERSTOOD THAT PRIMARY ELECTRIC SERVICE, PHONE LINES AND HOOKUPS ARE THE BUYERS RESPONSIBILITY AND THE CONTRACT BECOMES DUE AND PAYABLE UPON DELIVERY OF THE SIGN DISPLAY REGARDLESS OF THE EXISTENCE OF THE SAME.

SALE PRICE *$2,990.00* **This price ☐ is ☑ is not (check one) inclusive of state sales tax, the cost of permit acquisition and permit.** ***All payments over 30 days shall bear interest at 1.5% per month .***
DOWN PAYMENT *$1,445.00* **. FINAL BALANCE DUE PRIOR TO INSTALLATION. ANY ALTERATIONS OR DEVIATION FROM ABOVE SPECIFICATIONS INVOLVING EXTRA COST WILL BECOME AN EXTRA CHARGE OVER AND ABOVE THE QUOTED PRICE.** MY SIGNATURE BELOW INDICATES THAT I HAVE READ AND UNDERSTAND THE TERMS OF THIS CONTRACT. DS _____ INITIAL

THIS PROPOSAL WILL EXPIRE 7 DAYS FROM THIS DATE. THIS CONTRACT WILL BE EFFECTIVE ONLY AFTER IT IS SIGNED BY BOTH PARTIES

This company warrants this display to be free of defects in material and/or workmanship for a period of 12 months from the installation date, excluding Incandescent lamps. All work will be completed in a workmanlike manner. All agreements contingent upon strikes, accidents, or delays beyond the control of the Company. Our workers are fully covered by workman's compensation insurance. The above sign will remain the property of the Company and can be removed from the premises by the Company unless payment is made in full upon delivery and prior to installation unless other terms are agreed to prior to delivery. In the event of sign removal due to non-payment the Buyer shall pay all costs of removal and the costs of any subsequent reinstallation of sign.

This Agreement shall be construed and interpreted under and according to the laws of the State of Wisconsin. The parties to this Agreement consent to the exclusive jurisdiction and venue of the courts of the State of Wisconsin, County of Waukesha in connection with any and all actions arising out of this Agreement. In the event that there is any litigation concerning this Agreement, the Company shall be entitled to recover it's attorneys' fees, costs and expenses incurred in connection with the litigation.

In the event the sign cannot be installed due to any delay for causes beyond the control of the Seller, the Contract Balance shall become immediately due and payable, less the cost for installation.

CONTRACT ACCEPTANCE: The above prices, specifications and conditions are sastisfactory and are hereby accepted. The Company is hereby authorized to do the work as specified. Payment will be made as outlined herein.

CUSTOMER SIGNATURE» _____

Customer Name: _____

Date: _____ **Title:** _____

Salesman: **Dave Salkin**

Accepted By: _____
Bauer Sign and Lighting

REV. 08 09

Sales Order

Coshatt
(HL Coshatt Company, Inc.)
1870 Woodlands Industrial Dr.
Birmingham, AL 35173
205-833-2446 voice 205-833-6659 fax

medi * module

Sold To:
Hayat Pharmacy
Milwaukee, WI
Confirm To:

Ship To:
Hayat Pharmacy
Milwaukee, WI

Customer Number:	Salesperson:	Number:	Date:	SHIP DATE:
0009335	BM	0034846	10/31/2019	10/31/2019

Customer P.O.	Ship VIA	F.O.B.	Terms
			In Advance

Item Code	Unit	Ordered	Price	Amount
Retail Area				
IS454-1313SWCHR Island Section 4'x54"Hx13"Base Chr w/Slatwall	EACH	7	307.70	2,153.90
IE54-1313CHR Island End 54"H x 13"Base Chr	EACH	1	88.00	88.00
TL413NCHR TL Shelf 48 x 13 CHR	EACH	56	19.10	1,069.60
WED3054-13SWCHR Wall End Display 30"x54"Hx13"Base Slatwall Back	EACH	6	241.40	1,448.40
TL3013NCHR TL Shelf 30" x13" CHR	EACH	24	23.10	554.40
WS484-16SWWHT Wall Section 4'Wx84"Hx16"Base WHTSlatwall	EACH	5	271.40	1,357.00
WS384-16SWWHT Wall Section 3'Wx84"Hx16"Base WHTSlatwall	EACH	2	271.40	542.80
WS384-136 Wall Starter 3'x84"Hx13"Base, No CNTP, 2 EP, 6 Shelf Over Base, Plt Martek Back	EACH	1	800.87	800.87
WE84-16WHT Wall End 84" Hx 16" base	EACH	1	71.50	71.50
TL413NCHR TL Shelf 48 x 13 CHR	EACH	25	19.10	477.50
TL313NCHR TL Shelf 3' x 13" CHR	EACH	10	19.10	191.00

4way displayers

Continued

Sales Order

Coshatt
(HL Coshatt Company, Inc.)
1870 Woodlands Industrial Dr.
Birmingham, AL 35173
205-833-2446 voice 205-833-6659 fax

medi * module

Sold To:
Hayat Pharmacy
Milwaukee, WI
Confirm To:

Ship To:
Hayat Pharmacy
Milwaukee, WI

Customer Number:	Salesperson:	Number:	Date:	SHIP DATE:
0009335	BM	0034846	10/31/2019	10/31/2019

Customer P.O.	Ship VIA	F.O.B.	Terms
			In Advance

Item Code	Unit	Ordered	Price	Amount
FWD5436DSMCHR Four Way Displayer 54"Hx36" Wood Deck, all CHR w/ MC 2 Melamine Oak Slotwall Backs	EACH	3	1,418.42	4,255.26
TL210NCHR TL Shelf 2' x 10" CHR	EACH	24	20.10	482.40
Coffee bar				
WS484-243 Wall Starter 4'x84"Hx22"Base, CNTP 25"D, 2 EP, 1 Shelf Under Counter, 3 Shelf Over Counter, Plt Martek Back	EACH	1	1,253.15	1,253.15
WA484-243 WAddOn 4'x84x22 CNTP 25D, 3 Shv OC/1 ShvUC Plt Mtk Back	EACH	4	443.55	1,774.20
CA384-243 Inside Corner Add-On 3'x84" 22"B CNTP 24"D, 3 Shelves Over Counter, 1 Shelf Under Counter	EACH	1	697.78	697.78
IS436-1313PCHR Island Section 4'x36"Hx13"Base Peg Back	EACH	2	133.40	266.80
IS336-1313SWCHR Island Section 3'x36"Hx13"Base Chr w/Slatwall	EACH	1	295.70	295.70
IS236-1313SWWHT Island Section 2'x36"Hx13"Base WHTw/Slatwall	EACH	1	305.90	305.90
IE36-1313CHR Island End 36"H x 13"Base Chr	EACH	2	86.00	172.00
TL413NCHR TL Shelf 48 x 13 CHR	EACH	3	19.10	57.30
TL313NCHR TL Shelf 3' x 13" CHR	EACH	3	19.10	57.30

Continued

Sales Order

Coshatt
(HL Coshatt Company, Inc.)
1870 Woodlands Industrial Dr.
Birmingham, AL 35173
205-833-2446 voice 205-833-6659 fax

medi * module

Sold To:
Hayat Pharmacy
Milwaukee, WI
Confirm To:

Ship To:
Hayat Pharmacy
Milwaukee, WI

Customer Number:	Salesperson:	Number:	Date:	SHIP DATE:
0009335	BM	0034846	10/31/2019	10/31/2019

Customer P.O.	Ship VIA	F.O.B.	Terms
			In Advance

Item Code	Unit	Ordered	Price	Amount
TL213NCHR TL Shelf 2' x 13" CHR	EACH	3	20.40	61.20
CNTP30BT Bar Top 30"d Per Ft.	EACH	12	36.30	435.60
WS254-16SWHT Wall Section 2x54 16" Base WHTSlotwall Back	EACH	1	189.60	189.60
WS454-16SWHT Wall Section 4x54 16" Base WHTSlotwall Back	EACH	3	183.40	550.20
WE54-16CHR Wall End 54"Hx16"Base Chr	EACH	2	65.30	130.60
TL213NCHR TL Shelf 2' x 13" CHR	EACH	4	20.40	81.60
TL413NCHR TL Shelf 48 x 13 CHR	EACH	8	19.10	152.80
RX F TOP Rx Front Top 18"d w/ 4" Band Price per Foot	EACH	18	42.00	756.00
CNTP30PF 30"D Post Form Top Per Foot	EACH	18	36.30	653.40
Check Out Area				
IS436-1313SWCHR Island Section 4'x36"Hx13"Base Chr w/Slatwall	EACH	3	295.70	887.10
IE36-1313CHR Island End 36"H x 13"Base Chr	EACH	2	86.00	172.00

Continued

Sales Order

Coshatt
(HL Coshatt Company, Inc.)
1870 Woodlands Industrial Dr.
Birmingham, AL 35173
205-833-2446 voice 205-833-6659 fax

medi * module

Sold To:
Hayat Pharmacy
Milwaukee, WI
Confirm To:

Ship To:
Hayat Pharmacy
Milwaukee, WI

Customer Number:	Salesperson:	Number:	Date:	SHIP DATE:
0009335	BM	0034846	10/31/2019	10/31/2019

Customer P.O.	Ship VIA	F.O.B.	Terms
			In Advance

Item Code	Unit	Ordered	Price	Amount
TL413NCHR TL Shelf 48 x 13 CHR	EACH	9	19.10	171.90
RXCON Consultation Area For Pharmacy	EACH	1	1,595.00	1,595.00
GATE Gates and Hardware	EACH	1	271.12	271.12
CNTP30BT Bar Top 30"d Per Ft.	EACH	16	36.30	580.80
WEP Rx Wrap End Pnl	EACH	2	235.76	471.52
Will call				
WS454-16SWHT Wall Section 4x54 16" Base WHTSlotwall Back	EACH	3	183.40	550.20
WS354-16SWHT Wall Section 3x54 16" Base WHTSlotwall Back	EACH	1	183.40	183.40
WE54-16WHT Wall End 54"Hx16"Base Wht	EACH	1	63.30	63.30
SLUHR4806 Hang Rod 48" For Will Call Bag	EACH	8	17.80	142.40
DP104 Hang Up Bags Will Call Pk. 10 10 1/2" x 12 1/2 "	EACH	30	19.46	583.80
DPIDGP-25 Alpha Index Tabs For Will Call Pkg 25	EACH	1	43.36	43.36

Continued

Sales Order

Coshatt
(HL Coshatt Company, Inc.)
1870 Woodlands Industrial Dr.
Birmingham, AL 35173
205-833-2446 voice 205-833-6659 fax

medi * module

Sold To:
Hayat Pharmacy
Milwaukee, WI
Confirm To:

Ship To:
Hayat Pharmacy
Milwaukee, WI

Customer Number:	Salesperson:	Number:	Date:	SHIP DATE:
0009335	BM	0034846	10/31/2019	10/31/2019

Customer P.O.	Ship VIA	F.O.B.	Terms
			In Advance

Item Code	Unit	Ordered	Price	Amount
RX F TOP Rx Front Top 18"d w/ 4" Band Price per Foot	EACH	16	42.00	672.00
TL413NCHR TL Shelf 48 x 13 CHR	EACH	4	19.10	76.40
TL313NCHR TL Shelf 3' x 13" CHR	EACH	4	19.10	76.40
CEP End Panel Combination	EACH	2	412.89	825.78
Workcounter w/undercounter Units				
CNTP30PF 30"D Post Form Top Per Foot	EACH	16	36.30	580.80
RXVLDRP Vial Drawer	EACH	2	458.14	916.28
RXCPRRP Computer Unit	EACH	2	381.11	762.22
RX4DRPFRP 4-Drawer Prescription File Unit	EACH	2	562.17	1,124.34
RXPRNT1161RP Printer Unit w/30" Clearance	EACH	2	424.00	848.00
WS484-243 Wall Starter 4'x84"Hx22"Base, CNTP 25"D, 2 EP, 1 Shelf Under Counter, 3 Shelf Over Counter, Plt Martek Back	EACH	1	1,253.15	1,253.15
UST314824 Sink Kit on Base Deck Cabinet & Sink Hardware	EACH	1	1,567.21	1,567.21

Continued

Sales Order

Coshatt
(HL Coshatt Company, Inc.)
1870 Woodlands Industrial Dr.
Birmingham, AL 35173
205-833-2446 voice 205-833-6659 fax

medi * module

Sold To:
Hayat Pharmacy
Milwaukee, WI
Confirm To:

Ship To:
Hayat Pharmacy
Milwaukee, WI

Customer Number:	Salesperson:	Number:	Date:	SHIP DATE:
0009335	BM	0034846	10/31/2019	10/31/2019

Customer P.O.	Ship VIA	F.O.B.	Terms
			In Advance

Item Code	Unit	Ordered	Price	Amount
Drug Storage Shelving				
FRX16IS Flex Rx Starter 16x16x84 20 Sh.No Backs	EACH	3	410.02	1,230.06
FRX16IA Flex Rx Island Add-On 16x16x84 No Backs 20 Sh.	EACH	21	255.48	5,365.08
FRXEF8416-KIT Flex Rx End Frame Kit - contains 1 FRXEFHDWE - Hardware, 2 FRXST16 - Stretcher, 2 FRXU84 Uprite End Frame 84"H	EACH	5	124.53	622.65
FRXS1607 Flex Rx Shelf 16" x 7" 2 Pos.	EACH	50	7.20	360.00
FRXOB4872 Flex Rx Overhead Brace	EACH	4	28.00	112.00
FRXWP8409 Flex Rx Wall Panel 84"h x 9"w	EACH	10	86.80	868.00
FRXIP8416 Flex Rx Island Panel 84"h x 16"w	EACH	1	140.82	140.82
Compounding Area				
WS484-243 Wall Starter 4'x84"Hx22"Base, CNTP 25"D, 2 EP, 1 Shelf Under Counter, 3 Shelf Over Counter, Plt Martek Back	EACH	1	1,253.15	1,253.15
WA484-243 WAddOn 4'x84x22 CNTP 25D, 3 Shv OC/1 ShvUC Plt Mtk Back	EACH	8	443.55	3,548.40
CA384-243 Inside Corner Add-On 3'x84" 22"B CNTP 24"D, 3 Shelves Over Counter, 1 Shelf Under Counter	EACH	1	697.78	697.78

Continued

Sales Order

Coshatt
(HL Coshatt Company, Inc.)
1870 Woodlands Industrial Dr.
Birmingham, AL 35173
205-833-2446 voice 205-833-6659 fax

medi * module

Sold To:
Hayat Pharmacy
Milwaukee, WI
Confirm To:

Ship To:
Hayat Pharmacy
Milwaukee, WI

Customer Number:	Salesperson:	Number:	Date:	SHIP DATE:
0009335	BM	0034846	10/31/2019	10/31/2019

Customer P.O.	Ship VIA	F.O.B.	Terms
			In Advance

Item Code	Unit	Ordered	Price	Amount
Call Center				
WS484-243	EACH	1	1,253.15	1,253.15
Wall Starter 4'x84"Hx22"Base, CNTP 25"D, 2 EP, 1 Shelf Under Counter, 3 Shelf Over Counter, Plt Martek Back				
WA484-243	EACH	3	443.55	1,330.65
WAddOn 4'x84x22 CNTP 25D, 3 Shv OC/1 ShvUC Plt Mtk Back				
WA384-243	EACH	1	402.22	402.22
Wall Add-On 3'x84"Hx22"Base, CNTP 25"D, 3 Shelf Over Counter, 1 Shelf Under Counter, Plt Martek Back				
CA384-243	EACH	1	697.78	697.78
Inside Corner Add-On 3'x84" 22"B CNTP 24"D, 3 Shelves Over Counter, 1 Shelf Under Counter				
Lab Area				
WS484-243	EACH	1	1,253.15	1,253.15
Wall Starter 4'x84"Hx22"Base, CNTP 25"D, 2 EP, 1 Shelf Under Counter, 3 Shelf Over Counter, Plt Martek Back				
WA484-243	EACH	3	443.55	1,330.65
WAddOn 4'x84x22 CNTP 25D, 3 Shv OC/1 ShvUC Plt Mtk Back				
WA384-243	EACH	1	402.22	402.22
Wall Add-On 3'x84"Hx22"Base, CNTP 25"D, 3 Shelf Over Counter, 1 Shelf Under Counter, Plt Martek Back				
WA3084-243	EACH	1	402.22	402.22
Wall Add-On 30"x84"Hx25"Base, CNTP 24"D, 3 Shelf Over Counter, 1 Shelf Under Counter, Plt Martek Back				
UST314824	EACH	1	1,567.21	1,567.21
Sink Kit on Base Deck Cabinet & Sink Hardware				
CA384-243	EACH	2	697.78	1,395.56
Inside Corner Add-On 3'x84" 22"B CNTP 24"D, 3 Shelves Over Counter, 1 Shelf Under Counter				

Continued

Sales Order

Coshatt
(HL Coshatt Company, Inc.)
1870 Woodlands Industrial Dr.
Birmingham, AL 35173
205-833-2446 voice 205-833-6659 fax

medi * module

Sold To:
Hayat Pharmacy
Milwaukee, WI
Confirm To:

Ship To:
Hayat Pharmacy
Milwaukee, WI

Customer Number:	Salesperson:	Number:	Date:	SHIP DATE:
0009335	BM	0034846	10/31/2019	10/31/2019

Customer P.O.	Ship VIA	F.O.B.	Terms
			In Advance

Item Code	Unit	Ordered	Price	Amount
IS384-242433 Island Starter 3'x84"x47" CNTP 24"D, 3 Shelves Over Counter, 1 Shelf Under Counter	EACH	1	2,228.55	2,228.55
IA284-242433 MM 2' Isle Add On 84"x24" Cntp 48D,3 Sh OC 1Sh UC	EACH	1	771.34	771.34
Breakroom				
WS484-243 Wall Starter 4'x84"Hx22"Base, CNTP 25"D, 2 EP, 1 Shelf Under Counter, 3 Shelf Over Counter, Plt Martek Back	EACH	1	1,253.15	1,253.15
WA484-243 WAddOn 4'x84x22 CNTP 25D, 3 Shv OC/1 ShvUC Plt Mtk Back	EACH	2	443.55	887.10
WA3084-243 Wall Add-On 30"x84"Hx25"Base, CNTP 24"D, 3 Shelf Over Counter, 1 Shelf Under Counter, Plt Martek Back	EACH	1	402.22	402.22
CA384-243 Inside Corner Add-On 3'x84" 22"B CNTP 24"D, 3 Shelves Over Counter, 1 Shelf Under Counter	EACH	1	697.78	697.78
UST314824 Sink Kit on Base Deck Cabinet & Sink Hardware	EACH	1	1,567.21	1,567.21
DTS121836-3 12x18x36 Double Tier Lockers Assembled w/ Legs	EACH	4	899.00	3,596.00
PRM-PLT36S 36" Square Table Top	EACH	2	199.00	398.00
/SURCHARGE Surcharge Wood & Metal	EACH	1	6,482.22	6,482.22
/D Delivery			0.00	4,820.00

Continued

Sales Order

Coshatt
(HL Coshatt Company, Inc.)
1870 Woodlands Industrial Dr.
Birmingham, AL 35173
205-833-2446 voice 205-833-6659 fax

medi * module

Sold To:
Hayat Pharmacy
Milwaukee, WI
Confirm To:

Ship To:
Hayat Pharmacy
Milwaukee, WI

Customer Number:	Salesperson:	Number:	Date:	SHIP DATE:
0009335	BM	0034846	10/31/2019	10/31/2019

Customer P.O.	Ship VIA	F.O.B.	Terms
			In Advance

Item Code	Unit	Ordered	Price	Amount
/I Installation			0.00	6,800.00

PLEASE SIGN BOL - PENDING INSPECTION or DAMAGED
14 DAYS TO TURN IN CLAIMS, SEND PICTURES IF POSS.
Freight is an estimate only and subject to change
3% Fee added to charge if paid by credit card

Net Order:	89,938.56
Less Discount:	0.00
Freight:	0.00
Sales Tax:	0.00
Order Total:	89,938.56

Opinion of Probable Cost

for

Whitefish Bay Pharmacy

12/16/2019

Solution Summary:

Client is seeking an A/V solution for the following:
-Background audio solution for new building
-Single source of streaming audio
-Controlling system via client supplied iOS / Android device

Solution Assumptions / Risks:

-Assumes existing wireless network
-Lift rental can be substituted for a $130 ladder rental if working height is less than 14', or eliminated if working height is lower than 11'

Description	Qty	Unit Price($)
70v Amplifier	1	$550 - $720
70v Pendant speaker (pair)	4	$520 - $550
Streaming audio player	1	$390 - $440
Bulk cabling & interconnects	1	$280 - $330
Small wall mounted A/V rack	1	$390 - $440
Lift Rental	1	$610
Installation	1	$1,500 - $1,650
	Total Project	$5,790 - $6,390

The itemized list includes the solution components deemed appropriate for this project. The values are based on experience, taking into consideration "best fit" products and current market conditions. The price ranges are generalized to provide guidance towards determining an approximate project cost. The information contained herein is not to be considered a Quote nor Proposal to complete work.

Shipping and taxes have not been included in the solution budget but considerations should be given to their inclusion.

Prepared By:
Pete Caivano
Engineer
(CTS) Certified Technology Specialist

Prepared on behalf of:
Michael Humpal
Sales Advisor

For further information please contact your Sales Advisor.

Last updated on: 5/4/2018
© 2018 Best Buy Co., Inc.
All information confidential and property of Best Buy Co., Inc.

BCO Entrances Inc.
24 Theall Road
uston, TX 77066

Blake Carter 713-906-4332 bcarter@nabcoentrances.com

www.nabcoentrances.com

Estimate

Date	Estimate #
12/13/2019	43812SM

Estimate valid for 30 day from above date

Sold To:

Attn: Chelsea Miller
Hayat Pharmacy

Ship To:

Hayat Pharmacy
424 E. Silver Spring Dr.,
Whitefish Bay, WI.53217

Terms	Project
Net 30 After Completion of Installation (Pending Credit Approval)	Hayat Pharmacy

Qty	Description (Furnish and Install)
	THIS QUOTE REPRESENTS THE INSTALLATION OF (1) NABCO GT8500 AUTOMATIC SINGLE SWING DOOR OPERATORS IN A STANDARD ANODIZED FINISH. WIRED PUSH PLATES INCLUDED. PLEASE NOTE THAT IT IS THE RESPONSIBILITY OF THE CUSTOMER TO PROVIDE POWER AND ALL LOW VOLTAGE WIRE CONNECTIVITY BETWEEN SYSTEM COMPONENTS AND THE HEADER BOX LOCATIONS.
2	Series 8500 Single Swing Door Operator with push / out arm assembly.
2	Clear or Dark Bronze Standard Anodized Finish
2	Activation by 2-ea 4 3/4" square 900 mhz radio controlled push plates with 900mhz receiver
	We will install equipment; Electrician will have to run all wires to make final connection Installed by factory trained AAADM certified technician
	Warranty: One year on materials and labor during normal working hours
	Excludes: * 120v/10a Power to operator * Preparation of Rough Opening * Transom and other Glazing * Break metal and Perimeter Caulking * Back Boxes and low voltage wiring (2 ea #18 to push plates) * Doors, Frames and other Hardware * Solid Blocking for mounting operator * Integration with Access Control / Fire System / other Electronic Hardware

ACCEPTANCE OF PROPOSAL: The above Prices, specifications and conditions are satisfactory and are hereby accepted. You are authorized to do the work as specified. Applicable sales tax is subject to change upon invoicing. If company or job is exempt from sales tax, return fully completed exemption certificate with signed estimate or proposal.

Signature _____ **Date** _____

Total includes estimated sales tax, but is subject to change upon final billing.

Total **$4,180.00**

I/We understand and agree that the information provided is for the purpose of obtaining merchandise on credit.I/We further understand and agree that all accounts or monies due to NABCO ENTRANCES, INC. shall be paid in accordance with the Credit Terms above. Penalties are at a rate of 1.5% per month (18% per year) and will be assessed against all accounts 60 days past due based on a month end aging method. I/We agree to pay all reasonable costs of collection, in addition to any court costs and/or attorney fees incurred.

GT500/8500

Heavy-Duty/Low-Energy ADA Swing Door Operator

Where SOLUTIONS are AUTOMATIC

Product Features and Benefits

- Adjustable closing speeds and low power consumption to **enhance energy savings**
- Heavy-duty motor and mechanical gearbox **offer longevity and dependability**
- Mechanical operator with a microprocessor control **provides quiet, efficient, and smooth operation**
- A workhorse operator that features stack pressure compensation for **confidence and peace of mind** while complying with the ANSI A156.19 standard
- Optimized for use with access control systems
- Other various features available, such as push and go, recycle on obstruction, and anti-slam wind control

GT500/8500 Heavy-Duty/Low-Energy/ADA Swing Door Operator

The NABCO GT500/8500 Heavy-Duty/Low-Energy Operator is engineered for interior and exterior use, and designed to automate essentially any new or existing door frame. The side load header access panel simply pivots up and locks into position, out of the way, enabling quick installation and ease of servicing. NABCO ensures the highest level of customer satisfaction and the lowest failure rate. The low-energy performance combined with the adjustable opening and closing speeds reduce energy consumed, which offers a prompt return on your investment.

- Passed the one-million-cycle endurance test
- Separate components allow for lower repair costs

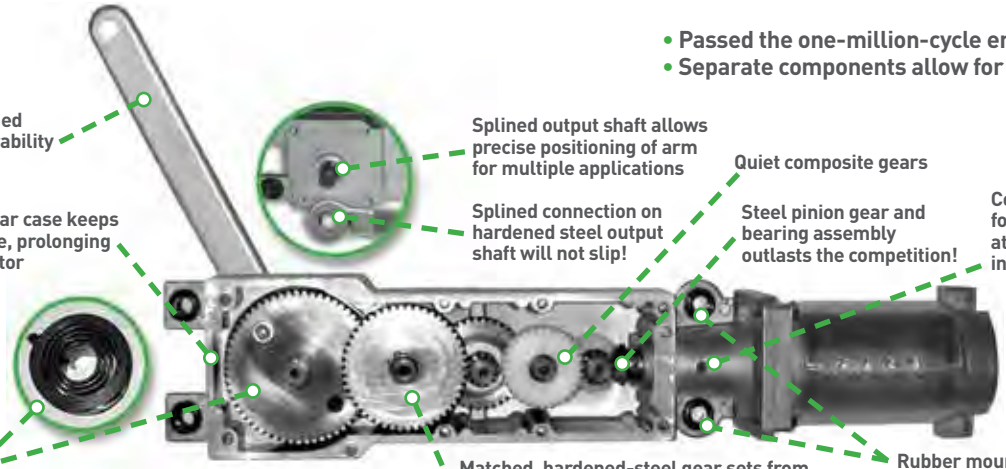

PRODUCT INFORMATION

Header dimensions	Bottom load – 5" H X 5 1/2" D (GT500) Side load – 6" H X 5 1/2" D (GT8500)
Standard finish	Clear and dark bronze anodized
Optional finishes	Painted, clad, special anodized
Mounting	Surface-applied
Installation types	Push or pull
Operating voltage	120 VAC
Auxiliary power output	12VDC 750mA
Operator drive	Electro-mechanical
Motor voltage	Pulse width modulated
Motor type	1/10th HP permanent magnet motor
Control type	Programmable microprocessor
Door panel weight	300 lbs.
Adjustable open	Force and speed
Adjustable close	Force and speed
Closing method	Spring (with selectable power assist)
Adjustable opening angle	90° to 110°
Power boost close	Selectable
Basic features	Low-energy operation Push and go Obstacle detection in opening and closing cycles Sequential or timer mode operation LCD screen for programming and diagnostics Open- or closed-circuit safety inputs Momentary or maintained activation
Switch modes	On, off, hold-open
Opening and closing speed	Adjustable
Hold-open time	Adjustable (0-30 seconds)
UL listed for fire-rated doors	GT600*/GT8500
Code compliances	ANSI A156.19/ANSI A117.1
Approvals	UL, ULC

*GT600 is designed for NABCO's bottom load fire rated operator. This unit is the same as GT500 with the addition of a Fire Door listing decal and the documentation package.

GT500 Operator Bottom load

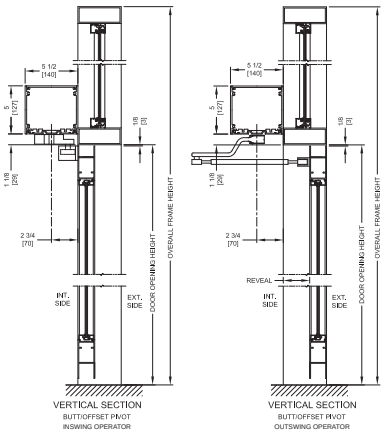

GT8500 Operator Side load

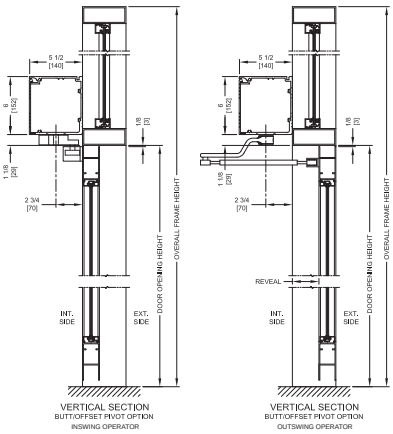

CONFIGURATIONS:
The GT500/8500 is available for multiple configurations such as single doors, simultaneous pairs, and dual egress. Also available for Opman configurations. The Opman is a continuous header for a pair of doors containing a manual closer on one side and an automatic operator on the other side.

NABCO Service and Specifications

Along with the NABCO factory branches, NABCO has the largest independently owned network of automatic door distributors in North America. Their friendly, qualified installers and technicians always strive to exceed your expectations from install to after-sales service. NABCO's factory branches and independent distributors provide AAADM-certified technicians to ensure your doors meet all ANSI A156.10/A156.19 standards.

Complete three-part specifications and CAD drawings are available on the NABCO website.

NABCO

Member of the Nabtesco Group

Member AAADM

NABCO ENTRANCES INC.
S82 W18717 Gemini Drive | Muskego, WI 53150 | 877-622-2694 | Fax 888-679-3319
www.NABCOentrances.com | Email info@NABCOentrances.com

Distributed by:

K.L. SECURITY

1-866-867-0306

B-Rated Double Door Pharmacy Safe, FireKing B3742WD-SR2

Be the first to review this product

Providing a safer and more secure work environment for employees, Pharmacy Safes have secure storage and enable controlled administration of narcotic medications within a pharmacy or medical facility where dealing with the potential threat of robbery, burglary, and internal theft are an ongoing concern.

Availability: In stock

US$2,295.00 Qty: 1 ADD TO CART

Specifications

Exterior Dimensions: 37.5" H x 42" W x 22" D

Interior Dimensions: 35.25" H x 20.75" W x 19.5" D

Weight: 648 lbs.

(/resize/Shared/Images/Product/American-Security-PSAudit-14-Pharmacy-Safe-Audit-Electronic-Lock/PSAudit_Small_Closed.jpg?bw=1000&w=1000&bh=1000&h=1000)

American Security PSAudit-14 Pharmacy Safe - Audit Electronic Lock

There are no reviews yet. | Write a review (/store/WriteReview.aspx?ProductID=65028&ifd=www.gunsafes.com)

Retail: $2,725.00

$2,089.00

You Save: $636.00 (23.3%)

McKesson Connect

CATALOG ORDERS BACKORDERS RETURNS PHY INV TELXON REPORTS ADMINISTRATION HELP TUTORIAL

CATALOG SEARCH | QUICK ORDER RESULTS

Account: 302574-HAYAT PHARMACY 1 | Dept Name: | By: Keyword Search (Recommended) | For: 3959566 | Non-Mck? | GO | Show Ima

CATALOG : SEARCH RESULTS

PAGE LINES: 400 PAGE COUNT: 1 of 1

Exclude Drop Ship Exclude Non Stocked Items GO

Mck Item #	Image	Hist	NDC	Description	Strength	Package Size	Generic Description	AWP	Est. Net Price	Unit Price	Purchase Price	Price Ind	DC Qty	Q
3959566				C2 RX SAFE W/10 DRAWERS DS					**$2,377.00**	$2,377.0000	$2,377.00		DS	

QUICK ORDER | INVENTORY AND AUTO-SUB CHECK | EXPORT | PRINT | Add to New Order | GO

CII Pharmacy Safe

with ESLAudit Electronic Lock

McKesson Part #3959566

SAFE FEATURES:

- AMSEC ESLAudit Electronic Lock
- B-rated burglar-resistive classification
- Solid Steel 4 gauge (1/4") door, 11 gauge body
- Single auxiliary spring loaded relock device, activated by a punch attack
- Heavy-duty three point locking mechanism
- Lock status Time Delay Indicator box with 10ft cable
- 10 Adjustable roll-out doors
- Cabinet mounted directly onto the floor with 4 anchor holes
- 38" tall x 39" wide x 22" deep
- 560 lbs. shipping weight
- Warning label included

ESLAudit Electronic Lock

Each CII Cabinet comes with 8 keys: 7 blue staff Pharmacist and 1 red manager key

HealthMart PHARMACY

McKESSON

Manufactured By:

AMSEC AMERICAN SECURITY

ESLAudit

Electronic Lock

Every business, large or small, can benefit from an easy to use safe access control system. **AMSEC'S ESL AUDIT ELECTRONIC LOCK** makes it easy to manage safe access with its integrated USB Port and user-friendly PC application. Download lock settings, Upload lock settings, Download audit trail, Upload software upgrades and More! In addition, all functions can be securely shared via email.

SECURITY

All components communicate through an encrypted network

Supports dual control and armored car pickups

Supports time delay as a deterrent to robberies

Supports time lock restricted access to defined operating hours

Supports alarm output or duress alarm

2,000-record audit trail

Supports up to 40 users, each of whom can have unique privileges

PIN code and/or electronic keys for user authentication

Optional door sensor detects if door is left open

Back-up database secured inside of safe

FLEXIBILITY

Retrofits most mechanical or electronic locks

3 unique lock designs

Controls 1 or 2 doors

Safe doors can be configured in an inner/outer door configuration

Authentication options: PIN and/or AMSEC e-Key

9-volt battery and optional AC power

Optional remote time delay indicator

Update firmware via USB port

POWERFUL PC APPLICATION

Manage users

View and store audit trails

Manage system configuration

Manage door settings

Admin Screen

Audit Screen

User Screen

Manufactured By:

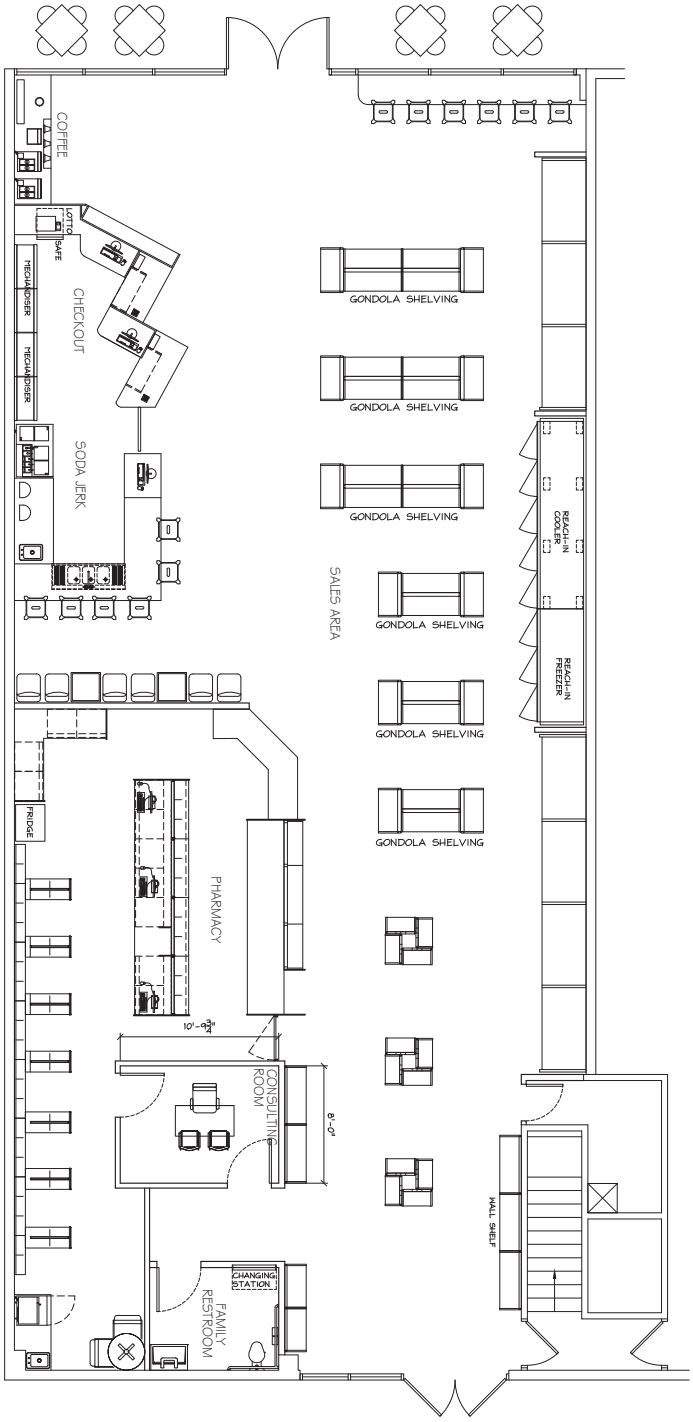

DRAWN BY:	MP
CHECKED BY:	JM
DATE:	2021-12-02
JOB NUMBER:	3123
SCALE:	1/4" = 1'-0"
SHEET	XX OF XX

REVISION	DATE	BY

HEALTHMART - HAYAT PHARMACY

MILWAUKEE, WI

STORE LAYOUT PLAN

DESIGN POSSESSION CLAIM

THIS DESIGN IS OF ORIGINAL CONCEPT STATE AND THE SOLE POSSESSION OF THE PARAGON SOLUTIONS DESIGN GROUPS. UNDER NO CIRCUMSTANCES SHALL ANY PORTION OF THIS DESIGN BE USED OR CONSTRUCTED TO GAIN PROFITS THROUGH ITS USE WITHOUT WRITTEN CONTRACTUAL AGREEMENT BETWEEN CLIENT AND SAID DESIGN FIRMS.

PARAGON SOLUTIONS DESIGN GROUPS ARE NOT RESPONSIBLE FOR ANY STRUCTURAL, CONSTRUCTION, FABRICATION, ELECTRICAL AND/OR PLUMBING FAILURES CONCERNING THIS PROJECT, BUT RATHER IS THE SOLE RESPONSIBILITY OF THE ENGINEER, ARCHITECT, AND/OR GENERAL CONTRACTOR AUTHORIZED BY THE OWNER(S) ON THIS PROJECT.

VENUE: ANY ACTION ASSIGNED PURSUANT TO THIS DESIGN SHALL BE IN THE APPLICABLE TEXAS COUNTY AND THIS DESIGN IS SO GOVERNED BY THE LAWS OF TEXAS.

PARAGON SOLUTIONS

201 MAIN STREET, SUITE 1150 | FORT WORTH, TEXAS 76102 | PHONE: 817-927-7171

SNACKS
GS
Lilliln
HOME DESIGN

HAYAT
PHARMACY
$0.00
MAGAZIN
lillilu
HOME DESIGN
It's what's inside that matters.

SNACKS
Lillilu
HOME DESIGN

Lillilu
HOME DESIGN
It's what's inside that matters.

BAUER Sign & Lighting COMPANY

2500 South 170th
New Berlin, Wisconsin
Proudly Made in the USA!

Web: www.bauersignusa.com
Phone: 262-784-0500
Fax: 262-787-6675

File Whitefish Bay Pharm
Location
Client
Sales rep Dave Salkin
Date cb 10/21/19
Revision

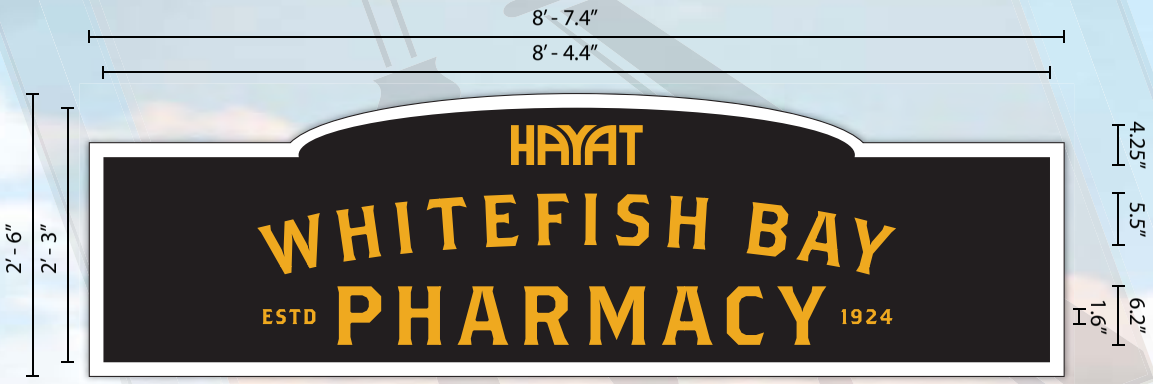

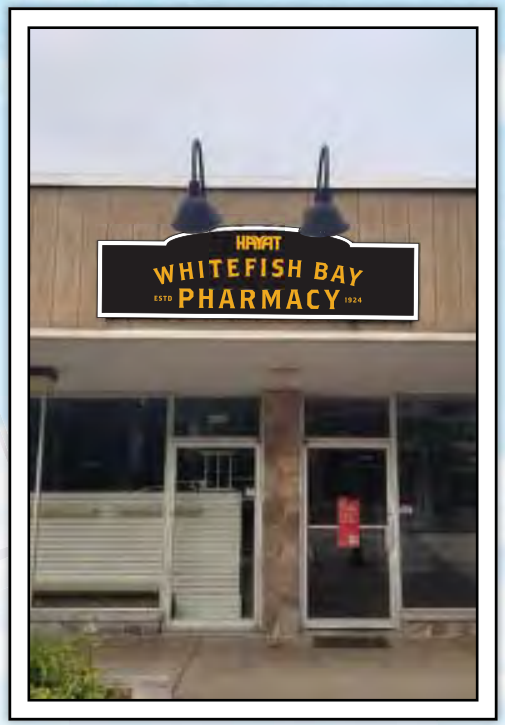

FABRICATION

- [ ] CHANNEL LETTERS
- [ ] OPEN CHANNEL LETTERS
- [ ] REVERSE CHANNEL LETTERS
- [ ] NEON ACCENTS
- [ ] CABINET SIGN
- [ ] MONUMENT SIGN
- [ ] PYLON SIGN
- [ ] PYLON PANEL (S) ONLY
- [x] PLATE LETTERS
- [ ] OTHER
- [ ] SINGLE SIDED [ ] DOUBLE SIDED
- [ ] RACEWAY MOUNT
- [ ] FLUSH MOUNT
- [ ] INTERNALLY ILLUMINATED
- [x] NON ILLUMINATED
- [ ] WHITE LED [ ] RED LEDS
- [ ] 120V TRANSFORMERS
- [ ] 30 M.A. [ ] 60 M.A.
- [ ] 120V ADVANCE BALLASTS
- [ ] COMPUTER CUT GRAPHICS
- [ ] DIGITALLY PRINTED GRAPHICS
- [ ] .125 ALUMINUM ROUTED FACE
- [ ] PLEX FACE
- [ ] PLEX BACKED
- [ ] FLEX FACE
- [ ] LEXAN FACE
- [ ] RETURN
- TRIMCAP
- [ ] RETAINERS
- [ ] MESSAGE CENTER
- [ ] BASE
- [ ] POLE COVER
- [ ] ADDRESS NUMBERS
- [ ] SPECIAL INFORMATION

Printed artwork colors are not always representative of final product colors. Please refer to specifications for call out or salesman for samples.

These drawings are the exclusive property of Bauer Sign Company. Not to be duplicated in any way without expressed written permission!

FINAL ELECTRICAL CONNECTION IS CLIENT'S RESPONSIBILITY

our products are certified by: Underwriters Laboratories, Inc.

This sign shall be manufactured in accordance with the Article 600 of the National Electrical Code and/or the applicaple local codes. This includes proper grounding and bonding of the sign. Sign shall bear correct UL Labels.

Scale: 3/4" - 1'

OFFICE LEASE

THIS LEASE AGREEMENT, made and entered into this 1 day of ~~September~~ October, 2019, by and between ATID Properties, LLC, Agent for the Owner (hereinafter "Lessor") and Hayat Pharmacy, LLC (hereinafter "Lessee").

Witnesseth:

Article 1
Premises and Term

1.1 *Premises.* Lessor hereby leases to Lessee and Lessee hereby leases from Lessor and takes as tenant, upon the terms and condition specified herein, certain office space (hereinafter "the premises") on the first (1st) floor of Lessor's building (hereinafter "the building") located at 412-424 East Silver Spring Drive, Whitefish Bay, County of Milwaukee, State of Wisconsin, said space known as Suite (suite number) and contains approximately 3,600 rentable square feet. The premises are leased together with the appurtenances, including the right to use in common with others areas. of the building. Included within the terms of the premises is the use of the parking area between the leased premises and the alley North of the Building. Such parking area may only be used by Lessee for parking of its own or customers vehicles or deliveries to Lessee. Lessee shall also be entitled to the exclusive use of the portion of the Building's basement located directly below the leased premises, including in the Northeast corner of the basement and the two storage spaces in the common area of the basement outside and to the West of the "420" tenant's basement entry door (referred to as "The Cage") plus the space at the West end of the basement area (referred to as "The Soda Room").

1.2 *Purpose.* Lessee shall occupy and use the premises for the operation of a retail pharmacy, including but not limited to health related items, gifts and other merchandise traditionally offered in a retail pharmacy, and shall not use the premises or the building of which it is a part for any other purpose.

1.3 *Commencement Date and Term.* The term hereof shall be for a period of eight (8) years and shall commence on the 1st day of November, 2019, or such earlier or later date as agreed upon by Lessee and the current occupant of the premises, and shall end at 5:00 o'clock P.M. on the 31st day of October, 2027, unless earlier terminated by Lessor as provided herein. Date of Lessee's occupancy shall be subject to Lessee's agreement with the current occupant to vacate the property.

1.4 *Holding Over.* If Lessee remains in possession of the premises after the expiration of either the original term of this lease or the last day of any extension of said term, and Lessor elects to accept rent thereafter, such holdover shall not be deemed or construed to be a renewal or extension of this lease, but Lessee shall be deemed to be

occupying the premises as a Lessee on a month-to-month basis only. During such month-to-month tenancy, rent shall be payable at the same rate as that in effect during the last month of the preceding term, and the Lessee shall also be subject to all the conditions, provisions and obligations of this lease to the extent they are applicable to a month-to-month tenancy. Such month-to-month tenancy may be terminated by the Lessor at the end of any month by giving thirty (30) days' prior written notice to the Lessee.

1.5 *Condition of Premises.* Lessee acknowledges that it has inspected the premises and by the execution of this Lease accepts it in its present "as is" condition. Neither Lessor nor any of its representatives has made any warranties or representations as to the physical condition of the premises upon which lessee relies. Lessee shall be responsible for any improvements required by any state or local governing body to obtain its occupancy permit.

1.6 *Option to Extend* Lessee shall have three (3) options to extend for a term of five (5) years for each option with six (6) months written notice of intent, prior to the end of the applicable lease term, to exercise such option ("option term"). Rent during the option term shall be at the market rate at the time the option is exercised and thereafter increasing annually based upon the Consumer Price Index pursuant to Article 2.1 herein, but in no circumstance, shall rent increase more than 3.0% over the prior lease year.

Article 2
Rent

2.1 *Base Rent.* Base rent will be paid according to the Schedule A attached hereto beginning February 1, 2020. Beginning November 1, 2022, Base Rent shall be increased annually at the rate of 1.5%. Beginning November 1, 2025, Base Rent shall be adjusted annually to reflect increases in the Consumer Price Index for All Urban Consumers, U.S. City Average, for all items, 1982-84=100 ("CPI-U") published by the United States Department of Labor (*http://www.bls.gov/cpi*) or if not available a similar CPI calculation. The monthly Base Rent will increase by the percentage of the most recently published increase in the CPI-U for the calendar year effective on January 1st of each year this lease is in effect (the "adjustment date") not to exceed three percent (3.0%) in a single adjustment.

2.2 *Late Payment Penalty.* In the event that Lessor does not receive payment of the rent on the first day of the month, Lessee shall pay a penalty equal to five percent (5%) of the base monthly rent.

2.3 *Additional Rent.* Beginning on November 1, 2019, Lessee shall pay its proportionate share of operating costs for the Building as defined in this Lease ("Operating Costs") to Lessor on the first day of each calendar month, in advance, in an amount which is calculated by Lessor to be equal to one twelfth (1/12) of Lessee's annual

obligations for such Operating Costs. The parties agree that Lessee's proportionate share ratio shall be 33.3%. Operating Costs shall mean all costs, expenses, Taxes (hereinafter defined), disbursements of every kind and nature which Lessor shall pay or become obligated to pay in connection with the management, operation, insurance, maintenance, replacement and/or repair of all buildings, improvements and land comprising the Building and of the personal property, fixtures, machinery, equipment, systems and apparatus located in or used in connection therewith and the costs of alterations or improvements to the buildings, improvements and land comprising the Building required by applicable laws, rules, orders, ordinances, directions, regulations and requirements of federal, state, county and/or municipal authorities. Operating Costs shall also include utilities not separately billed to a tenant. Operating Costs shall not include the following: (l) costs of improvement of the Leased Premises and the premises of other tenants of the Building; (2) charges for depreciation of the Building and improvements comprising the Building; (3) interest and principal payment on mortgages; (4) ground rental payments; (5) real estate brokerage and leasing commissions; (6) any expenditures for which the Lessor has been reimbursed (other than pursuant to proration of Operating Costs, rent adjustment and escalation provisions provided in leases); (7) capital improvements to the Building, except with respect to the costs associated with capital improvements installed by Lessor for the purpose of reducing Operating Costs or complying with any directive and/or regulation of any governmental authority. In the event that Lessee's proportionate share of the total of Operating Costs paid or payable by Lessor with respect to the above mentioned building (including the adjacent land owned by Lessor, parking areas, walks, driveways, etc.) shall in any calendar year during the term of this Lease or each extended year exceed the proportionate share of Operating Costs paid or payable by Lessee in the calendar year, Lessee shall pay thirty-three point three percent (33.3%) of such excess as additional rent, payable monthly in advance, together with the base rent on the rent payment date, according to Lessor's best estimates. Adjustments shall be made following the close of each year as accurate data becomes available, with any amount due from Lessee to Lessor being payable within fifteen (15) days after submission of an itemized statement. Prorations shall be made for fractional years, if appropriate, if this Lease commences or terminates on dates other than the first and last dates of any calendar year. Lessor shall have the right, from time to time, to make adjustments to the Lessee's monthly installments due for Operating Costs upon written notice to Lessee.

2.4 *Taxes.* Taxes shall mean all federal, state and local government taxes, assessments and charges (including real estate taxes, transit, general or district taxes or assessments) of every kind or nature, whether special, ordinary or extraordinary, which Lessor shall pay because of or in connection with the ownership of improvements and land comprising the Building, or of Lessor's personal property, fixtures, machinery, equipment, systems and apparatus located therein or used in connection therewith (including any rental, sales, leasing or similar taxes levied on or with respect to the rent, or any part thereof, payable under the Lease in lieu of, or in addition to general real

and/or personal property taxes). For purposes hereof, Taxes for any year shall be taxes which are assessed or become a lien during such tax year. There shall be include in Taxes for any year the amount of all fees, costs and expenses (including reasonable attorney's fees) paid by Lessor during such year in seeking or obtaining any refund or reduction of Taxes and Lessee shall receive its prorata share of the benefit of any such refund or reduction, even after the expiration or earlier termination of the Lease. Taxes in any year shall be reduced by the net amount of any tax refund received by Lessor during such year. If a special assessment payable in installments is levied against the Building, Taxes for any year shall include only the installment of such assessment and any interest applicable to such year. Taxes shall not include any federal, state or local use, franchise, capital stock, inheritance, general income, gift or estate taxes, except that if a change occurs in the method of taxation resulting in whole or in part in the substitution of any such taxes, or any other assessment, for any Taxes as above defined, such substituted taxes or assessment shall be included in the Taxes; provided, however, that Lessee shall be responsible for and shall pay personal property taxes on its personalty, even if such personalty includes improvements to the Building that may become the property of Lessor upon expiration or termination of this Lease. For the calendar year in which this Lease commences and terminates, the provisions of this article shall apply and Lessee's liability for is proportionate share of Taxes for such year shall be subject to a pro rata adjustment based on the number of days in said calendar year during which the term of this Lease is in effect.

2.5 *Security Deposit.* In addition to the payment of rent, Lessee shall pay the sum of $6,600 as a security deposit to be paid upon the signing of the Lease, as security for Lessee's full performance of his Lease, including payment of rent and as protection against damage to the premises.

Article 3
Compliance with Requirements

Lessee shall promptly procure, maintain and comply with all permits, licenses and other authorizations required for the use of the premises for the purposes stated herein and for the lawful operation, maintenance, and repair of the premises or any part thereof. Lessee will not do any act or thing which constitutes a public or private nuisance. Lessee shall take responsibility for securing any and all occupancy permits, if necessary. Lessor will join, if necessary, in the application for any permit or authorization with respect to any legal requirements.

Article 4
Maintenance, Alterations and Additions

4.1 *Maintenance and Care of Premises.* Lessee shall be responsible for all interior maintenance of the leased premises during the term of this Lease, other than the

obligations of the Lessor as stated herein. Lessee shall be responsible for one-half of the repairs costs for the heating and air conditioning systems ("HVAC") determined to be necessary by an independent contractor, unless such repairs are necessary as the result of the misuse or negligence of the Lessee, in which case Lessee shall be responsible for the entire repair cost. Lessee shall keep the premises in as good condition as when turned over to it, ordinary wear and tear or damage caused by a fire casualty excepted, and, at its expense, shall make all repairs and take all other action necessary or appropriate thereto, whether ordinary or extraordinary, foreseen or unforeseen, and maintain the premises in good order and in a clean and sanitary condition in conformance with the laws and ordinances applicable thereto. All repairs and replacement shall be at least equal in quality of materials and workmanship to that originally existing in the leased property. Lessee shall neither do nor permit to be done in said premises anything which is in violation of the terms of insurance policies in force and effect providing coverage for the building and/or said premises, or in violation of laws or ordinances applicable thereto. Lessee shall not cause or permit any waste, damage, or injury to the premises and shall pay for all glass broken by its own fault or negligence, or the fault or negligence of its employees, representatives, agents, and/or invitees. Lessee shall indemnify Lessor against all costs, expenses, liabilities, losses, damages, suits, fines, penalties, claims and demands, including reasonable attorneys' fees, because of Lessee's failure to comply with the above.

4.2 *Lessor Obligations.* Lessor shall be responsible for all costs and expenses, unless caused by Lessee, related to the structure and common areas of the Building, including mechanical systems, HVAC, other than the repairs of such system as provided herein, exterior doors and windows and the roof. Lessor shall be responsible for the replacement cost of the HVAC system if determined to be necessary by an independent contractor, unless such replacement is necessary due to the misuse or negligence of the Lessee, in which case the Lessee shall be responsible for the replacement of such system. Lessee shall be responsible for all maintenance and repairs of the non-structural portions of the premises.

4.3 *Alterations and Additions.* Lessee shall not make additions or improvements to or alterations of the premises without obtaining prior written consent of Lessor and then only by contractors or mechanics approved in writing by Lessor. Upon written consent by the Lessor, all maintenance and repair, and each such addition, improvement, or alteration must not, individually or in the aggregate, substantially lessen the fair market value of the property or materially affect the property's usefulness in lessee's business, shall be completed expeditiously in a good and workmanlike manner, and in compliance with all legal requirements and all insurance requirements, and shall be part of the premises and subject to this Lease.

4.4 *Lessee Property.* All alterations, decorations, installations, additions, or improvements made by Lessee to the premises which are so attached that they cannot be

removed without material injury to the premises shall become the property of Lessor upon installation and shall remain upon and be surrendered with the premises as a part of them at the end of the term of this Lease. Not later than the last day of the term of this Lease, Lessee may, nevertheless, remove all its personal property. As described above, the premises shall be surrendered to Lessor at the end of the term in as good condition as they were at the beginning of the term, except for reasonable wear, and damage by fire, the elements, casualty, or other cause not due to the misuse or neglect by Lessee or Lessee's agents, servants, customers, visitors or licensees.

4.5 *Mechanics' Liens.* Lessee shall not subject Lessor's interest in the premises to any mechanics' or materialman's' liens or other lien of any kind. The Lessee shall not allow a lien or claim of any kind to be filed or claimed against the Lessor's interest in the premises during the continuance of this lease. If such lien is claimed or filed against the premises or the building for work claimed to have been done for, or materials claimed to have been furnished to Lessee, it shall be discharged by Lessee within ten (10) days after Lessee is given written notice that a claim has been filed or within ten (10) days after Lessor is given written notice of the claim and transmits written notice of its receipt to Lessee, whichever ten (10) day period expires earlier. The Lessee will cause such release and discharge, at Lessee's expense, by filing the bond required by law or proper payment or otherwise.

4.6 *Obstructions.* Lessee shall not store or place any materials of whatsoever kind or nature or any obstructions in the lobby, passageways, stairs, on the sidewalks or areas abutting the building or in any of its public portions.

Article 5
Assignment and Subletting

Lessee may not pledge, assign or otherwise transfer by merger, stock transfer or otherwise, its interest herein without Lessor's prior written consent. Nor may Lessee sublet the premises, in whole or in any part, without such written consent of the Lessor. In any event, Lessee's obligations hereunder shall not be affected or reduced and shall continue in full effect as the obligations of a principal and not as a guarantor or surety; Lessee and any Guarantor shall remain liable for the payment of all rent required to be paid hereunder and for the performance of all terms, conditions and covenants herein undertaken by Lessee and the sublease or assignee, as the case may be, shall likewise be liable.

Article 6
Utilities and Services

6.1. *Utilities and Services.* Lessor shall furnish water, electric current and outside grounds and parking lot maintenance and shall, between the first day of October and

thirty-first day of May, provide heat for the premises in the opinion of Lessor to be necessary. Lessor shall also provide air conditioning in the opinion of Lessor to be necessary during the hours when the premises are open for business. Lessor shall only be required to vacuum and empty wastebaskets on the premises and shall not provide janitorial services. Lessor shall, if available to the premises, during ordinary business hours of the day, provide such elevator service as shall be necessary. Lessee shall provide its own telephone and Internet service.

6.2 *Conditions.* The aforementioned utilities and services furnished or performed by Lessor shall be provided as shall be in the opinion of Lessor to be reasonably necessary to the comfortable use and occupancy of the premises during business hours, except Saturdays, Sunday or holidays, upon the condition that the Lessor shall not be liable for any failure, due to causes reasonably beyond its control and not due to Lessor's own negligence, to supply the aforementioned utilities and services.

Article 7
Indemnity and Liability Insurance

7.1 *Indemnification and Non-Liability of Lessor.* Lessor shall not be liable for any damage or loss to Lessee or to any property of Lessee for failure to furnish heat, electricity, water, gas, elevator service, air conditioning, or janitorial service by reason of breakdowns, the necessity for repairs or improvements to said services, fire, explosions, strikes, theft, or any cause beyond Lessor's control (nor shall such failure be deemed an eviction of Lessee or relieve the Lessee from any of Lessee's obligations hereunder), nor shall Lessor be liable for personal injuries, death or damage to persons or property resulting from the use or escape of gas, water, steam, electricity, air conditioning, acts or neglect of co-tenants, or other agency, or due to fire, explosion, falling plaster, water, rain or snow, or leaks from any part of the premises or property of which they are a part, from the pipes, appliances or plumbing works, from the roof, street or sub-surface, or from any other place or by dampness or by any other cause of whatsoever nature or action of the elements, unless caused by or due to the negligence of Lessor, its agents, servants, or employees. Lessor shall not be liable to Lessee, its employees, agents, or visitors, or any other person for injury to, or the death of, any person or damage to property on or about the premises, the common areas, or any adjoining property arising, or alleged to arise, from or in connection with the following: the negligence or misconduct of Lessee, its employees, subtenants, licensees, or concessionaires, or any other person entering the premises and/or the building of which they are a part, under Lessee's express or implied invitation; Lessee's use of the premises and the conduct of its business therein; a breach or default by Lessee in performing its obligations under this lease. Moreover, Lessor shall not be liable for damages for injury to the person or property of Lessee or others, except to the extent of its obligations under this lease, if any, for any latent defect in the premises or the building of which they are a part. Lessee agrees to hold Lessor harmless and

indemnify it against all loss, costs, expenses, including attorneys' fees resulting from any violations by Lessee with respect to applicable codes, laws, regulations and ordinances.

Lessee shall give immediate notice to Lessor in case of accidents in and/or damage to the premises or in the building of which they are a part or of defects therein or in any fixtures or equipment. Lessor shall give immediate notice to Lessee of its knowledge of any accidents and/or damage in the premises or accidents affecting services, access or other appurtenances to the premises, or (to the extent caused or claimed to arise from or be related to, Lessee's use or occupancy under this lease) in the building or of defects therein or in any fixtures or equipment.

During the entire term of this lease, Lessee shall indemnify and shall protect and hold Lessor harmless from and against all liabilities, losses, claims, debts, demands, costs, expenses, obligations, and judgments of any nature which may be made against Lessor or against its title in the premises, arising out of, alleged to arise, or in connection with, any alleged act or omission of Lessee or any person claiming under, by, or through Lessee under any circumstances outlined above. If it becomes necessary for Lessor to defend any action seeking to impose any such liability, Lessee shall pay Lessor all legal expenses, costs of court and attorneys' fees incurred by Lessor in effecting such defense in addition to all other sums that Lessor may be called upon to pay by reason of the entry of a judgment against it in the litigation in which such claim is asserted.

7.2 *Liability Insurance.* To guarantee such agreement to indemnify, from and after the time this lease commences, Lessee, at its sole expense and for the mutual benefit of Lessor and Lessee, shall carry and maintain comprehensive public liability insurance, including property damage, insuring both Lessee and Lessor as an additional insured against liability for injury to persons or property occurring in or about the premises and improvements arising out of its ownership, maintenance, use or occupancy, and for any other risk insured against by such policies. All of the insurance policies shall include Lessor as one of the named insured parties and shall fully protect both Lessor and Lessee, as their respective interests may appear. Such policies shall each contain a provision requiring that Lessor be given at least thirty (30) days' written notice prior to any cancellation or modification.

7.2.1 *Minimum Limits of Liability.* The insurance shall have minimum coverage limits of not less than Five Hundred Thousand Dollars ($500,000) for injury or death to any one person, ,minimum coverage limits of not less than One Million Dollars ($1,000,000) for injury or death to more than one person in any one accident or other occurrence, and minimum coverage limits of not less than One Hundred Thousand Dollars ($100,000) for damage or destruction to property, and shall be written by an insurance company satisfactory to Lessor. The policy limits set forth above shall be subject to increase at the direction of Lessor, from time to time, in the event

of inflation or other circumstances which would tend to make existing limits potentially inadequate. Lessee shall provide Lessor with copies or duplicate certificates of the policies and any subsequent replacement or renewed polices within 10 days of occupancy, renewal or acquisition of a replacement policy.

Article 8
Condemnation

If the premises or any material part thereof or any estate therein, or any other material part of the building of which the premises form a part materially affecting Lessee's use and occupancy of the premises, are taken by virtue of eminent domain or by a voluntary conveyance in lieu thereof, either party may terminate this lease upon thirty (30) days written notice. In such case, the rent and additional rent shall be apportioned as of the termination date specified in the notice and Lessee shall be repaid all rent and additional rent paid for any subsequent period. No part of any award or proceeds shall be payable to Lessee.

Article 9
Damages by Casualty

9.1 *Damage by Fire or Other Casualty.* If the premises are materially damaged or rendered materially untenantable by fire or other casualty (whether occurring in the premises alone or in the building of which they form a part), or are so damaged or so rendered untenantable by fire or other casualty (whether occurring in the premises alone or in the building of which they form a part), and Lessor shall fail or refuse within thirty (30) days thereafter to agree in writing to restore the same within ninety (90) days of such writing, Lessee or Lessor may, by giving written notice to the other party, terminate this lease upon a date specified in the notice. This termination date shall not be less than five (5) nor more than ten (10) days after the notice is given. In such event, the term of this lease shall expire in the same manner as if the date specified in the notice were the date herein originally specified for the expiration of the term. If Lessee does not give the required notice and Lessor agrees in writing to restore the damaged property, Lessor shall immediately proceed to repair, restore, and rebuild the premises and the building to their former condition at Lessor's sole expense, and complete the same with reasonable promptness. The rent and additional rent shall abate in proportion to the loss and impairment of the use of said premises from the date of the fire or other casualty until the repairs, restoration, and rebuilding are completed. If this lease is terminated pursuant to notice as provided above, Lessee shall pay no rent or additional rent for any period after the date of the fire or other casualty. The rent or additional rent shall be apportioned as of that date, and Lessee shall be repaid all rent or additional rent paid for any subsequent period.

9.2 *Waiver of Subrogation.* Lessor and Lessee mutually agree that each party shall insure its property against loss by fire, extended coverage perils, vandalism and malicious mischief, and to the extent possible, in the event of loss by these perils, or any other additional perils that have been insured, each party shall obtain, for each policy of such insurance, provisions waiving the insurer's right of any claim which it otherwise might have against the other party for loss or damage within the scope of the insurance, and each party, to such extent permitted, for itself and its insurers waives all such claims against the other party. In addition to such waiver of the insurer's and each party's right of subrogation against the other party, both parties shall use their best efforts to include in their respective policies an express agreement that the policy will not be invalidated if the assured waives the right of recovery against any party responsible for a casualty covered by the policy before the casualty.

If the waiver is not, or ceases to be, obtainable, with or without additional charge, the insured party shall, upon learning that, so notify the other party and it is agreed that every reasonable effort will be made to include therein a statement to the effect that: "It is hereby stipulated that this insurance shall not be invalidated should the insured waive in writing prior to any loss any or all right of recovery against any party for loss occurring to the property described herein," and shall notify the other party of its efforts. The waiver of subrogation or permission for release referred to herein shall extend to the agents of each party and its and their employees and shall be coextensive therewith, and, in the case of Lessee, shall also extend to all other persons and entities occupying or using the premises in accordance with the terms of this lease. If Lessee fails to carry insurance, Lessor shall be released coextensively and to the same extent as though Lessee's property were insured for insurance with extended coverage.

Article 10
Subordination

This lease and all rights of Lessee hereunder are and shall be subject and subordinate in all respects to the lien of any and all mortgages, or consolidated mortgage or mortgages, which may now or hereafter affect the premises, or any part thereof, and to all renewals, modifications, consolidations, replacements, and extensions of such mortgage or mortgages. This lease shall also be subject and subordinate to any first mortgage held by a lending institution, which may hereafter affect the real property and to all renewals, modifications, consolidations, and replacements thereof. Although no instrument or act by Lessee shall be necessary to effect the above subordination, Lessee will, nevertheless, in confirmation of such subordination, without cost or charge to Lessor, execute and deliver promptly to Lessor all certificates and further instruments that the mortgage holders may desire to confirm subordination of this lease on the above terms. If Lessee fails upon reasonable request to execute the certificate or instruments of subordination requested by Lessor, Lessee hereby irrevocably appoints Lessor attorney-in-fact to execute and deliver all such instruments for and on behalf of Lessee.

Article 11
Events of Default, Remedies

11.1 *Default and Termination.* Lessee shall remain liable for any deficiency of rent and agrees to pay the same if it abandons or vacates the premises before the expiration of the term hereof or in the event this lease is terminated for any breach of this lease on the part of Lessee. If Lessee defaults in the payment of rent, additional rent or any other charges when due (hereinafter "rental default") or defaults in the performance of any term, covenant, or condition of this lease (hereinafter "other default"), Lessor may give Lessee written notice of default. If Lessee does not cure any default or vacate the premises on or before a date at least five (5) days (or, if the default is of such nature that it cannot be completely cured within such time period, if Lessee does not commence the curing within the time period and thereafter proceed with reasonable diligence and in good faith to cure the default), after notice of default is given, Lessor may terminate this lease on the date specified in the notice and Lessee shall surrender and deliver up possession of the premises. However, Lessee shall remain liable as provided below. If this lease is so terminated by Lessor, it may at any time thereafter resume possession of the premises by any lawful means and remove Lessee and other occupants and their effects.

If, within one (1) year from the giving of such notice for a rental default or other default, there shall occur, for any reason, another rental default, or, as the case may be, any other default, then this lease shall terminate if Lessor gives Lessee notice to vacate the premises on or before a date at least fourteen (14) days after the giving of such notice. No act of Lessor in terminating this lease or recovering possession of the premises shall discharge Lessee from payment of any rent reserved in this lease for the term thereof and Lessee shall remain liable for all of such rent and all of the damages sustained by Lessor on account of the breach of this lease by Lessee.

11.2 *Repossession, Reletting and Deficiency.* In case of such re-entry, termination of lease, and/or dispossess by summary proceedings or otherwise:

(a) The rent shall become due thereupon and be paid up to the time of re-entry, dispossess and/or termination of lease, together with all reasonable expenses Lessor may incur for legal expenses, attorneys' fees, brokerage and putting the premises in such condition as the Lessee under the provisions hereof is required to maintain, or for preparing the same for relet. In case of a rental default or other default, Lessor may, in addition to terminating this lease and accelerating all or any part of the rental payments and other charges becoming due under this lease, pursue such other remedy, or combination of remedies, and recover such other damages for breach of tenancy and/or contract as are available at law. If Lessee fails to comply with any obligation which cannot be cured by the payment of money, Lessor may, after the service of a five-day notice and subject to Lessee's good faith and reasonable diligence in curing the default as described

above, enforce the same by specific performance, mandatory injunction or other equitable relief.

After the service of a notice or the commencement of a suit or after final judgment for possession of the premises, Lessor may receive and collect any rent due and apply the same as and for use and occupancy, and the payment and receipt thereof shall not waive or affect any such notice, suit or judgment.

(b) Whenever Lessor has recovered possession of the premises by reason of Lessee's default, Lessor shall make reasonable efforts to relet the premises. If Lessee vacates or abandons the premises or this lease is terminated prior to the expiration of the term hereof, Lessor may enter and occupy the premises or cause them to be redecorated, altered, divided, consolidated with other adjoining premises, or otherwise changed or prepared for reletting to the next tenant. Lessor may make all alterations, repairs, replacements, and decorations in the premises that it reasonably considers advisable and necessary for the purpose of reletting them, and the making of any alteration or decoration shall not operate or be construed to release Lessee from its above liability. Lessor may also relet all of the premises or any part thereof, either in its name or otherwise, for a term or terms which may at its option expire prior to, at the same time as, or subsequent to, the original expiration date of this lease, and receive the rent therefor. In reletting the premises as provided above, Lessor may grant rent concessions or free rent if reasonably required, for which Lessee shall not be credited. No such entry and reletting, unless expressly stated in writing to the contrary by Lessor, shall constitute a surrender and acceptance or be deemed evidence thereof so as to release Lessee from further liability under the provisions of this lease and shall be deemed an entry for the purpose of mitigating damages. Newspaper advertising shall not necessarily be required of Lessor to mitigate damages. Attempts to mitigate damages need not be commenced until after Lessee actually vacates, whether or not Lessor has prior notice of Lessee's intention to do so.

(c) Lessee or its legal representatives shall also pay Lessor as liquidated damages for Lessee's failure to perform, any deficiency between the rent hereby reserved and/or covenanted to be paid and the net amount, if any, of the rents collected on account of the reletting of the premises for each month of the period which would otherwise have constituted the balance of this lease term. Lessor shall apply such rent obtained from reletting as follows: first to the payment of any expenses it has incurred in connection with the reletting of the premises and the recovery of possession, redecorating, altering, dividing, consolidating with other adjoining premises, or otherwise changing or preparing for reletting, and the reletting, including legal expenses, brokerage and attorneys' fees; and then to the payment of damages equal to the rent hereunder and the expense of performance of the other covenants of Lessee as provided herein. Lessor shall not be liable in any way for failure to relet the premises, or, if they are relet, for failure to collect the rent under the reletting.

11.3 *Lessor's Lien.* Lessee grants to Lessor a lien upon all personal property of Lessee in the premises during the term of this lease, or any extensions thereof, to secure payment of the rent payable hereunder, and agrees that no such property shall be removed from said premises without the written consent of Lessor while any installments of rent are past due, or during any other default in the terms, covenants and conditions of this lease.

11.4 *Waiver of Redemption.* Lessee waives all right of redemption to which it or any person under it may be entitled by any existing or future law.

11.5 *Cumulative Remedies.* Lessor's remedies hereunder are in addition to any remedy allowed by law.

11.6 *Lessor's Cure of Lessee's Default.* If Lessee breaches any term, covenant, or condition of this lease, Lessor may, by giving reasonable notice to Lessee (except that no notice need be given in case of emergency), cure the breach at Lessee's expense. All reasonable expenses, including legal fees, incurred by Lessor in curing Lessee's breach shall be deemed additional rent payable on demand.

11.7 *Default period.* All default and grace periods shall be deemed to run concurrently and not consecutively.

Article 12
Signs

Lessee shall not display, erect, affix, place, or allow to be placed any signs, lights, lettering, stands, other like advertising matter or other projection of any nature in or on any part of the interior or exterior of the premises, or in or on the building of which they form a part, or on any other part of Lessor's property adjacent to the premises, without Lessor's prior written consent. Lessee shall also submit to Lessor complete sign drawings and specifications for prior approvals. Lessor may, at its expense, remove any or all permissible signs, at any one or more times during the term of this lease, if necessary to paint or make other repairs, alterations, or improvements in or upon all or any part of the premises or the building in which they are located. Upon the termination of this lease, Lessee shall remove all permissible signs and/or other like matter and repair any damages to the premises caused by the erection, maintenance or removal of the signs and/or other like matter.

Article 13
Common Areas

13.1 *Common Areas.* Lessor shall, at its expense, put and maintain in thorough repair and in good and safe condition all common areas in the building or buildings of which the premises are a part and shall be responsible for the operation, management and maintenance of the common areas. The manner of and expenditures for such maintenance shall be in Lessor's sole discretion. Lessor may from time to time increase, decrease or otherwise make changes, additions and eliminations to the dimensions, size, layout, identity, location and nature of the buildings or buildings, common areas and facilities.

13.2 *Lessee Use.* Lessee, and its employees, representatives, invitees and customers, when duly authorized under the provisions of this lease, shall have the nonexclusive right to use the common area as constituted from time to time. The use shall be in common with Lessor, other tenants to the building or buildings of which the premises are a part, and other persons permitted by Lessor to use the common areas. The use shall be subject to all reasonable rules and regulations prescribed by Lessor and by law. Except as otherwise provided in this lease, all permitted use and occupancy by Lessee of the common areas shall be at its own risk. Lessee shall release Lessor, and its agents, servants, contractors, and employees, from all claims and demands resulting from any accident, damage, or injury occurring therein, unless due to their willful acts.

Article 14
Inability to Perform

This lease and Lessee's obligation to pay rent or additional rent hereunder and perform and comply with all of its other covenants and agreements hereunder shall in no way be affected, impaired, or excused if Lessor is delayed, hindered, or otherwise prevented from performing any act required hereunder, by reason of strikes, labor troubles, or any other cause, including but not limited to, inability to procure materials, failure of power, government laws, regulations, or restrictions, riots, insurrection, acts of God, failure to act or default of the other party, war, or other causes that are beyond Lessor's reasonable control. The time given to Lessor to comply with any obligation under this lease shall be extended for a period equal to any period of delay resulting from any of the above causes.

Article 15
Lessor's Access

15.1 *Right of Entry.* Lessor and its agents shall have the right to enter upon the premises at all reasonable times to examine their condition and use for the purpose of inspection, cleaning, repairing, altering or improving the premises. If the premises are

damaged by fire, windstorm, or other casualty which causes them to be exposed to the elements, the Lessor may enter immediately upon them to make emergency repairs. However, if it does so, the act or acts shall not be deemed to excuse the Lessee from its obligation to keep the premises in repair, and the Lessee shall, upon the Lessor's demand, immediately reimburse it for the cost of the emergency repairs.

15.2 *Right to Show Premises.* Lessor shall have the right to enter the premises during the last three (3) months of the lease term, and any renewals thereof, at all reasonable times to show the same to prospective tenants with prior notice to Lessee.

Article 16
Rules and Regulations

16.1 *Further Rules and Regulations.* Lessor shall have the right to make such other and further reasonable rules and regulations as, in the judgment of Lessor, may from time to time be needful for the safety, care and cleanliness of the premises the building of which it is a part, and its appurtenances, and for the preservation of good order therein.

16.2 *Enforcement.* Lessor's failure to enforce any existing or future rules and regulations, either against Lessee or any other tenant in the building, shall not constitute a breach hereunder or waiver of any such rules and regulations.

Article 17
Successors and Assigns

The terms and conditions of this lease shall be binding upon and inure to the benefit of the parties hereto, and their respective successors, representatives and, except as otherwise provided herein, assigns.

Article 18
Notices

Any notice, request or demand permitted or required to be given by this lease, or by any law or governmental regulation, by Lessor to Lessee or Lessee to Lessor, shall be in writing and signed. Such notice, request or demand shall be given, and shall be deemed to have been served and given, by Lessor when Lessor serves it personally or deposits it by certified or registered mail, return receipt requested, postage prepaid, addressed to Lessee at the premises. Such notice, request or demand shall be given, and shall be deemed to have been served and given by Lessee to Lessor, when Lessee serves it personally or deposits it, by certified or registered mail, return receipt requested, postage prepaid, addressed to Lessor at its address: 5590 North Berkley Boulevard, Whitefish Bay, Wisconsin 53217. Any notice to be given to Lessee prior to the

commencement of this lease shall be given to it at PO Box 13337 Milwaukee, WI 53213 (suite number), Whitefish Bay, Wisconsin 53217.

Article 19
Miscellaneous Provisions

19.1 *Defacement of Walls and Woodwork.* Lessee shall not drive, or cause to be driven, any spikes, hooks, nails, screws, tacks or the like into walls or woodwork of the premises, except by the prior written consent of Lessor.

19.2 *Lessee's Right of Movement of Articles.* Lessor reserves the right to designate the time when and method whereby freight, furniture, safes, goods, merchandise and other articles may be brought into, moved or taken from the premises, buildings and rooms.

19.3 *Removal of Furniture and Fixtures Upon Lessor's Request.* Any and all furniture, fixtures and goods shall be removed by Lessee whenever such removal is requested by Lessor for purposes of repair.

19.4 *Locks and Keys.* Lessor shall have the right to keep passkeys to the premises, and to use the same to enter such premises in any emergency for inspection and repairs. No additional locks shall be placed on any doors of the premises without the consent of Lessor. Lessee shall return all keys to Lessor upon vacation of the premises in the number of sets initially provided to it by Lessor at the commencement of this lease.

19.5 *Waiver by Lessor.* No extension of time, forbearance, neglect or waiver by Lessor with respect to any one or more of the covenants, terms or conditions of this lease to be performed by Lessee shall be considered a waiver or shall act to stop Lessor from enforcing any subsequent breach or default of Lessee.

19.6 *Execution of Instruments.* Each party hereto agrees, when reasonably called upon to do so, to execute and deliver such instruments as may be required by the other party to effectuate or reflect the provisions of this lease, for mortgaging, leasing, insurance or other purposes, including but not limited to statements and certifications with respect to the default or non-default of the other part hereto.

19.7 *Severability of Provisions.* It is agreed that if any term or provision contained herein shall be declared to be to any extent invalid or unenforceable by a court of competent jurisdiction, the remaining terms, provisions and conditions of this lease, or the application of such to persons or circumstances other than those to which it is declared invalid or unenforceable, shall not be affected thereby, and shall be valid and enforceable and remain in full force and effect to the fullest extent permitted hereunder and by law.

19.8 *Headings.* The headings contained within this lease are inserted only as a matter of convenience and for reference. They in no way define, limit, or describe the scope or intent of the various provisions, terms and conditions of this lease.

19.9 *No Representations.* Neither party has made any representations or promises, except as contained in this lease.

19.10 *Governing Law.* This lease shall be construed in accordance with and governed by the laws of the State of Wisconsin.

19.11 *Entire Agreement.* This lease supersedes any agreements previously made between the parties relating to its subject-matter and this writing constitutes the entire agreement between the parties hereto, and may not be amended or altered in any manner except in writing signed by both parties.

IN WITNESS WHEREOF, the parties hereto have duly caused this lease to be executed in duplicate the day and year first above written.

LESSOR:

By: Martin Katz
Agent for the Owner

STATE OF WISCONSIN)
) SS.
MILWAUKEE COUNTY)

Katie Sfaine
Notary Public, State of Wisconsin
My Commission: 10·04·2020

LESSEE:

Hayat Pharmacy, LLC
By Tamir Kaloti, President

STATE OF WISCONSIN)
) SS.
MILWAUKEE COUNTY)

Notary Public, State of Wisconsin
My Commission: 12-2-2022

NOTARY PUBLIC
MARIA JACKSON
STATE OF WISCONSIN

GUARANTEE

The undersigned hereby guarantees the payment of all rent and other charges to become due pursuant to the Lease agreement between ATID Properties, LLC, Agent for the Owner and Hayat Pharmacy, LLC dated _____ for the premises located at 412-424 East Silver Spring Drive, Whitefish Bay, Wisconsin and all modifications, amendments and extensions thereof and guarantee the performance of all other covenants and obligations of the Lessee thereunder of all other covenants and obligations of the Lessee thereunder and pursuant to law. The undersigned agrees Lessor may deal with Lessee in any manner (by extending the time of payment, forbearing, amending the Lease or otherwise) without affecting the liability of the undersigned.

Dated at Milwaukee, Wisconsin this 1 day of October, 2019.

Tamir Kaloti

STATE OF WISCONSIN)
) SS.
MILWAUKEE COUNTY)

Notary Public, State of Wisconsin
My Commission: 12-2-2022

NOTARY PUBLIC
MARIA JACKSON
STATE OF WISCONSIN

GUARANTEE

The undersigned hereby guarantees the payment of all rent and other charges to become due pursuant to the Lease agreement between ATID Properties, LLC, Agent for the Owner and Hayat Pharmacy, LLC dated _____ for the premises located at 412-424 East Silver Spring Drive, Whitefish Bay, Wisconsin and all modifications, amendments and extensions thereof and guarantee the performance of all other covenants and obligations of the Lessee thereunder of all other covenants and obligations of the Lessee thereunder and pursuant to law. The undersigned agrees Lessor may deal with Lessee in any manner (by extending the time of payment, forbearing, amending the Lease or otherwise) without affecting the liability of the undersigned.

Dated at Milwaukee, Wisconsin this 1 day of October, 2019.

Hashim Zaibak

STATE OF WISCONSIN)
) SS.
MILWAUKEE COUNTY)

Notary Public, State of Wisconsin
My Commission: 12-2-2022

NOTARY PUBLIC
MARIA JACKSON
STATE OF WISCONSIN

SCHEDULE A

Rent Table*

Lease Year	Rate per Sq. Ft.	Annual	Monthly
1 - 3 months	$0.00	$0.00	$0.00
1 - 9 months	$22.00	$54,400.00	$6,600.00
2	$22.00	$79,200.00	$6,600.00
3	$22.00	$79,200.00	$6,600.00
4	$22.33	$80,388.00	$6,699.00
5	$22.66	$81,576.00	$6,798.00
6	$22.66*	$81,576.00*	$6,798.00**
7	$22.66*	$81,576.00*	$6,798.00**
8	$22.66*	$81,576.00*	$6,798.00**

* Operating Costs pursuant to Paragraph 2.3 are not included in Base Rent.

** Rent due shall be subject to applicable adjustment for CPI increases per the Lease terms.

Atid PROPERTIES
5590 N Berkeley Blvd
Whitefish Bay, WI 53217
414.223.3443
414.223.3446 fax
www.atidproperties.com

October 11, 2019

To Whom It May Concern:

This letter is being written in regard to our newest tenant Hayat Pharmacy. We are extremely excited to welcome them to the community.

As the Landlord of this property, we are in agreement of their request for grant dollars from the Village of Whitefish Bay. As an owner of three buildings on Silver Spring Drive, I've repeatedly shown my commitment to investing in my tenants and in Whitefish Bay as part of their greater comprehensive plan for the future.

Sincerely,

Martin H. Katz
River Beach

CONVENIENTLY TRANSFER YOUR PRESCRIPTIONS:

Transfer online! Go onto our website under the "Transfer My Meds" tab, fill out the e-form, and submit!

- or -

Call or visit your local Hayat Pharmacy and speak to a pharmacist to transfer

HAYAT PHARMACY

Visit www.HayatRx.com for locations and hours

SPECIALTY & COMPOUNDING

SPECIALTY:

Hayat Pharmacy is pleased to introduce Specialty Care Services, a better way to care for specialty patients. We are able to provide the high quality care you expect for your specialty medications in a local, retail setting.

We Coordinate

- Benefits investigation
- Prior Authorizations
- Co-pay assistance cards
- Foundation application assistance
- Program enrollment in manufacturer support programs
- Communication with your office and patient on prescription status

Patient Gets

- Access to pharmacist for urgent needs, questions, or medication management
- Personal one-on-one injection training from a pharmacist
- Choice of pick up at local pharmacy, delivery to patient's home or to your office
- One pharmacy for all of patient's medications and pharmacy needs

COMPOUNDING:

Compounding gives the pharmacist the means to customize medication to meet the individual needs of each patient. A compounding pharmacist can create a personalized medication formulated to give the patient the treatment they need.

HAYAT cares

AWARENESS. EDUCATION. ADHERENCE.

AWARENESS

Do you have expired medications? Our FREE **Dispose My Meds Program** allows you to safely dispose your meds to keep our environment safe. Bring your unused and expired medications in the original container to any of our Hayat Pharmacy locations for disposal!

EDUCATION - HAYAT CARES EVENTS

Hayat Pharmacy knows that increased awareness and education results in better health. Hayat Cares community health presentations is a FREE service that was developed to educate the local community about the leading health issues that affect us today.

ADHERENCE

We provide options like **Bubble Pack** and **AdherePac** to help our patients stay adherent by making it easier to take their medications.

AdherePac

Bubble Pack

HAYAT PHARMACY

Simplifying Your Life One Script At a Time

Visit www.HayatRx.com for locations near you

"Hayat Pharmacy promotes wellness through patient-centered education and ongoing supportive services. Definitely an asset to our community!"

-Judith R.

AWARD-WINNING SERVICES

Hayat Pharmacy is a Milwaukee-based independent pharmacy with over 10 locations. Hayat Pharmacy is focused on patient adherence, in-person medication therapy management (one-on-one medication education with a pharmacist), and medication synchronization through our Simplify My Meds program. Hayat Pharmacy is a nationally-recognized leader in the field of innovative medication management. We are dedicated to improving the health outcomes and lives of patients with chronic conditions such as: COPD, diabetes, heart failure, hepatitis C, HIV, and hypertension to name a few, through our award winning adherence programs. Our comprehensive service portfolio allows us the flexibility to implement optimized programs to meet our patients' needs while delivering unmatched local patient fulfillment.

FREE PRESCRIPTION DELIVERY

Hayat Pharmacy is dedicated to ensuring that all of our patients are adherent to their prescribed medications, therefore, Hayat Pharmacy delivers medications to patients in S.E. Wisconsin for **FREE**. In fact, we have a dedicated delivery department with a fleet of drivers to ensure that all of our patients medications are delivered efficiently and on-time.

SIMPLIFY MY MEDS (SMM)

WHAT IS SIMPLIFY MY MEDS?

Simplify My Meds saves patients time by scheduling and filling ALL of the patient's medications to be dispensed on the same day every month for pick-up or delivery. The days of picking up medications from your pharmacy several times a week are over. Hayat Pharmacy will handle working with physicians and insurance providers to ensure that your medications are available to you in the way that is most convenient.

HOW DOES IT WORK?

One week before your scheduled pick-up or delivery, a Simplify My Meds specialist from Hayat Pharmacy will call you to discuss any recent changes concerning your medications. Once processing is approved, your order will then be ready for pick-up or delivery.

SIMPLE. EFFICIENT. CONVENIENT.

With Simplify My Meds you can get all of your prescriptions on the same day every month delivered for free or ready for pick-up.

LIFE SIMPLIFIED

- All your prescriptions refilled and ready for you
- Monthly call from the pharmacy to review your medications
- Easy to get started

SIMPLIFY YOUR MEDICATIONS, SIMPLIFY YOUR LIFE.

MEDICATION THERAPY MANAGEMENT (MTM)

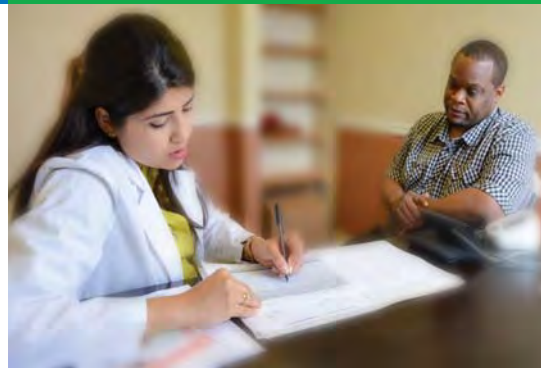

WHAT IS MTM?

Medication Therapy Management (MTM) is clinical care provided by a pharmacist in collaboration with healthcare providers whose aim is to improve drug treatment and increase healing outcomes for patients.

HOW DOES IT WORK?

Once a patient schedules an appointment, an MTM pharmacist will conduct an in-home patient consultation. The pharmacist will ask the patient to present all of their medications to educate, answer questions, discuss side effects and provide medication therapy training. The MTM session allows the pharmacist to make sure medications you are taking are safe.

THE PHARMACY THAT COMES TO YOU!

Contact Information

Whitefish Bay Pharmacy - Hayat
Hashim Zaibak, CEO - zaibak@hayatrx.com
Tamir Kaloti, President & CFO - Tkaloti@hayatrx.com

WHITEFISH BAY
ESTD PHARMACY 1924
HAYAT

January 23, 2020

Memo to: Chairman Krueger and the members of the Community Development Authority

From: John Edlebeck, P.E., Director of Public Works

Re: **Consaul Commons Redevelopment Project**

Village of Whitefish Bay

The Community Development Authority (CDA) in March 2019 solicited professional design services to prepare three conceptual plans for the redevelopment of the Village owned Consaul Commons located on Silver Spring Drive. Design professional RaSmith was then selected through that process. Upon the preparation of the three design concepts, quite an effort was undertaken by RaSmith, Village staff and Village consultant GRAEF to solicit, receive and summarize the over 100 comments received by the public on those three concept plans.

In November 2019 the CDA reviewed all of the collected information and recommended to the Village Board to proceed with the concept design option C for the redevelopment of Consaul Commons. This CDA recommendation was then reviewed by the Village Board at their December 16, 2019 meeting. The Village Board at that meeting voted to approve Consaul Commons redevelopment plan option C and directed Village staff to proceed with project design, bidding and construction.

At this time the estimate opinion of probable construction cost for option C is $268,000.00. This does not include any professional design or construction related services.

Due to the nature of the project, being a rather small site and including many different amenities, the project design will require the efforts of several different design professionals, including; landscape architect, civil engineer, structural engineer and lighting/electrical engineer. Village staff can work closely with the project design team to assist them, especially with the quality control review, however, there will need to be a substantial effort in design for this project to be successful. It is estimated that to complete project design through finished engineering plans and specifications, ready for bidding, a contract cost in the range of $40,000 would be expected. Once the project has been awarded for construction, however, Village staff will then be able to take more active role in project management with some aid from the professional consultant to keep the additional construction project management expenses down.

Village staff have been very impressed with the efforts and work products of RaSmith on this project so far. They have been very professional, cooperative and flexible, with the overriding philosophy of preparing a concept design that meets the needs and desires of our Whitefish Bay community. We as a staff are in agreement that we feel that RaSmith would continue to perform at a high level if selected for project design preparation. At the meeting on January 27, 2020, we are seeking direction from the CDA about whether to solicit a design, specifications and construction drawing proposal only from RaSmith or whether to solicit proposals from additional firms.

Regarding project schedule, it is anticipated that if design professional services can be acquired within the next 2 months, project design can proceed with project bid letting and award expected in January/February 2021. Construction would then proceed in 2021 with final completion no later than November/December 2021.

CDA MEETING STAFF REPORT

REPORT TO: Chairman Ray Krueger & CDA Members

REPORT FROM: Paul Boening – Village Manager

DATE: 1/22/20

AGENDA ITEM: Discussion regarding potential modifications to the Downtown Incentive Grant Program

ACTION REQUESTED:___Ordinance ___Resolution ___Motion √ Discussion/Direction

The CDA and Village staff worked with GRAEF to develop the Downtown Incentive Grant Program to dovetail with the vision developed for the Silver Spring Drive Business District. This program was envisioned to be more robust than the previous façade grant program, in order to spur investment in placemaking and aesthetic improvements, encourage interior and exterior property renovations, increase density, and support the continued investment in the District. The Village Board approved the initial Program Guidelines in June of 2017. In January of 2018, the Village Board adopted revisions to the Program Guidelines as recommended by the CDA.

In light of the addition of new CDA members, President Siegel suggested that the CDA conduct a lookback of grant applications/awards to date along with a review of the Program Guidelines to determine if there is a desire to retain the program and if so, to review the existing requirements, criteria, eligible/ineligible expenses and other components for potential revisions. Chairman Krueger was comfortable with that approach and agreed to add the item to the agenda.

A copy of the current Program Guidelines booklet is attached. At tonight's meeting, the CDA should determine whether there is a consensus in favor of conducting a lookback of applications/awards to date along with a review of the existing guidelines. If so, we will schedule the full discussion/review for the next CDA meeting.

DOWNTOWN INCENTIVE GRANT PROGRAM

Village of Whitefish Bay

Source: Village of Whitefish Bay

Source: Whitefish Bay Civic Foundation

TABLE OF CONTENTS

Understanding the Incentives | 5

Evaluating the Application | 9

Completing the Application | 13

UNDERSTANDING THE INCENTIVES

© Yellow Wood

Purpose & Program Overview

As part of a multi-faceted approach to maintaining and enhancing the social and economic vibrancy of the Silver Spring Drive Business District, the Village of Whitefish Bay's Community Development Authority (CDA) provides financial incentives on a competitive and discretionary basis to business and property owners. This program complements the 2016 Update of the Silver Spring Drive Master Plan and the 2017-2019 Strategic Plan for the Whitefish Bay Business Improvement District.

The Silver Spring Drive Business District is Whitefish Bay's neighborhood-based business corridor that serves the dual role of a symbol of the community's heritage on Milwaukee's North Shore and a contemporary business district with dynamic activity. The financial incentives will provide business and property owners with the opportunity to renovate and revitalize commercial space in the District to fulfill the community's vision for Silver Spring Drive.

Funding Outcomes

This program is a discretionary grant program incentivizing private sector investments for exceptional projects that further the vision and mission of previous strategic planning efforts in the Silver Spring Drive Business District. The primary objective of the grant program is to contribute to projects that otherwise may not occur and achieve one or more of the following:

- Create engaging spaces, encourage social spaces, and promote pedestrian activity through upgrades to storefronts, façades and streetscape features.
- Attract new businesses and encourage business development that improve the district's retail mix and commercial density through building expansions or interior renovations.
- Improve accessibility through building and/or site improvements that bring properties up to code for ADA accessibility standards.
- Improve the roofscape of the district through rooftop build-outs and improvements that can create occupiable spaces.

Grant Portfolio

The grant portfolio is comprised of two application types to accommodate projects of varying sizes. The scale of the project, the demonstrated need, the funding mix, and the financing gap will dictate the funding level that is appropriate. Minimum project budget (eligible expenses) is $20,000. Applicants are required to contact the Village Manager's office to discuss the project and which program or application type is best suited to the project. Final action on the grant award is determined by either the CDA or the Village Board, depending on the application type and the grant funding amount; see the "Evaluation Process" chart on page 10 for further information. Application types:

- **Property Improvement/Small Business Incentive –** Small business owners or property owners with project budgets under $100,000.00 may apply.
- **Proposal & Negotiated Agreement –** Projects with budgets of $100,000.00 or greater may apply for funding through this grant program, or may request gap financing assistance through a tax incremental financing incentive.

Investment Focus Area

Eligible projects will be located within the investment focus area in the Silver Spring Drive Business District. Silver Spring Drive is the pedestrian-friendly, social and economic hub of Whitefish Bay running west to east from Lydell Avenue to Marlborough Drive (as shown below).

As a prized historic streetcar suburb, Whitefish Bay has artfully crafted the Silver Spring Drive Business District as the heart of the community since the latter half of the 19th century. With a tree-lined thoroughfare, historic buildings, adjacent residential neighborhoods, wide sidewalks, aggressive traffic control, and an engaging mix of businesses, Silver Spring Drive is a highly-sought after commercial corridor in the Milwaukee region. The strength of Silver Spring Drive has been further bolstered by active and engaged residents and business owners. Residents appreciate the positive social impacts of Silver Spring Drive on the quality of life in Whitefish Bay; and, business owners pride themselves on providing a dynamic pedestrian-friendly shopping experience with a myriad of products and services.

The Silver Spring Drive Business District is continuously being reimagined and enhanced through master planning and strategic planning. It has been cultivated as a dynamic and flexible commercial district that reacts to consumer trends and remains resilient in the local marketplace. By providing unique products and services through a quality shopping experience, Silver Spring Drive has a strong reputation and brand.

INVESTMENT FOCUS AREA BOUNDARY (same as BID boundary)

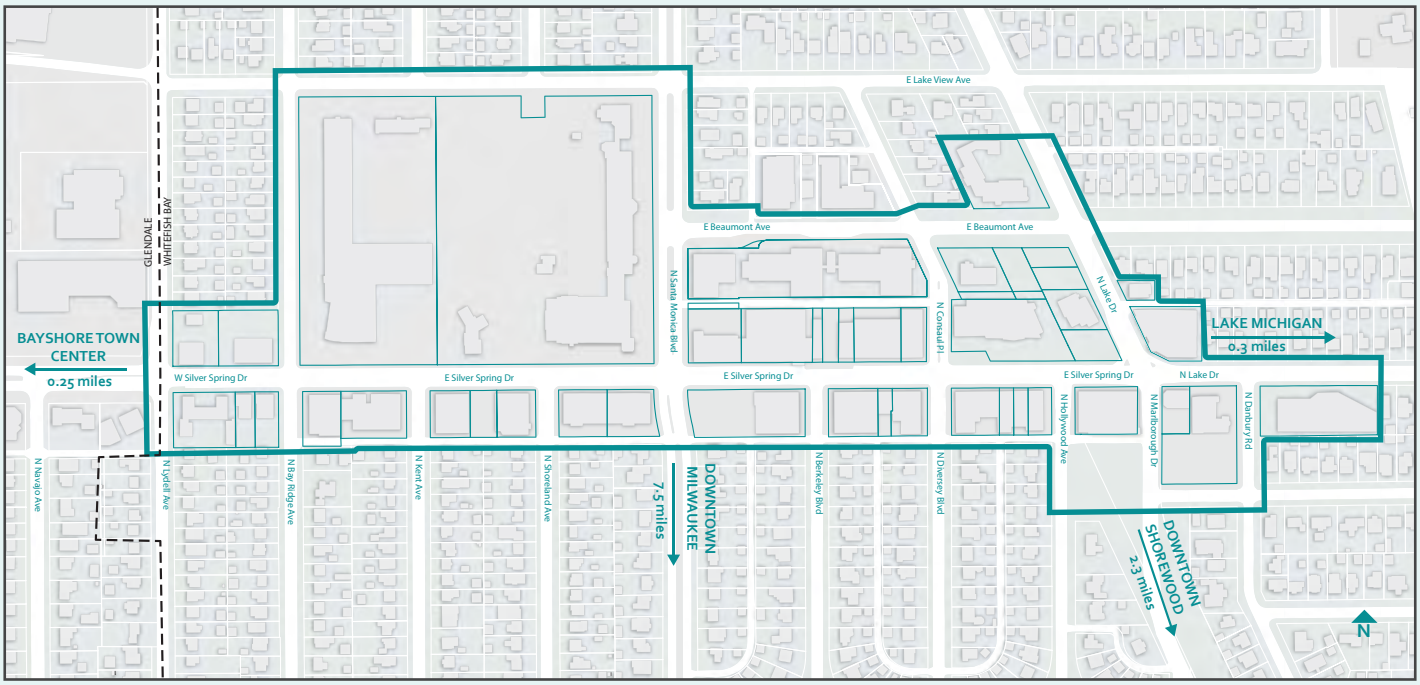

Vision of Recent Planning

Village Master Planning

The 2016 Update to the Silver Spring Drive Master Plan identified a series of opportunities for the Business District. The existing business owners in coordination with the Whitefish Bay Business Improvement District, CDA, and Village staff are preparing to make continuous investments along Silver Spring Drive. The financial incentives will bolster those investments and attract new ones.

The opportunities include:

- Increasing building density through the redevelopment and revitalization of unoccupied spaces with the mixing of uses through an integration of retail, office, and residential properties;
- Further strengthening and enhancing the brand of Silver Spring Drive through an engaging and pedestrian-friendly environment, positive customer experience, and strong business community;
- Actively maintaining and attracting daily amenity retail and active ground-level retail options;
- Sustaining and maximizing the economic capacity and attraction of Silver Spring Drive as a standalone, 'main street'-style commercial district; and,
- Fostering a pedestrian-friendly environment with street life activity.

BID Master Planning

Following the publication of the 2016 Master Plan Update, the Whitefish Bay Business Improvement District (BID) completed a three-year strategic plan for its operations from 2017 to 2019. The BID sought to capitalize on the Master Plan's momentum and continue to foster a business-friendly environment. The BID's goals include:

- Collaboratively, with other partners, cultivate a diverse portfolio of businesses along Silver Spring Drive to energize day- and night-time activities and enhance the Drive's lifestyle and culture;
- Promote Silver Spring Drive as Whitefish Bay's key social and public place that allows residents and shoppers to gather, engage in informal discussions, and support local merchants; and,
- Attract regional customers through a select number of large-scale events that define Whitefish Bay as a boutique shopping destination.

EVALUATING THE APPLICATION

© Boutique Photographer

Program Basics

Inquiries and applications for this grant program will be entertained and accepted on an ongoing basis. Applicants are required to meet with Village staff prior to submitting their application to review the program requirements and understand how their proposed project fits within the program's goals.

Business and property owners of commercial space with leases of at least three years (if a tenant) within the Silver Spring Drive Business District are eligible to apply.

The Whitefish Bay Business Improvement District may review and provide comment on applications; however, the awarding of funds is at the sole discretion of the Community Development Authority and/or the Village Board.

Grant Award Amount

The grant award amount will be reviewed by Village staff and evaluated by the Community Development Authority. Grant award amounts over $50,000 will also be reviewed by the Village Board. The recommendation of the grant award amount will be developed based on the following factors:

1. The extent to which the project achieves the funding outcomes outlined within the program guidelines (see page 5).
2. The proposed project financing and financing gap.

No grant awards will be made that exceed 50% of the eligible project costs.

See chart on page 10 for explanation of grant evaluation process.

Clawback Provision

The full grant is repayable if the project is not continuously used for the purpose stated on the application for three continuous years commencing on the completion of project construction. This provision is standard for all grant agreements, but the CDA reserves the right to include additional performance criteria.

Minimum Total Budget

Projects must have a minimum total budget of $20,000.00.

Permits & Code Compliance

The business or property owner must secure all required building permits before construction commences. All projects must meet the applicable building, zoning, and safety codes and requirements upon completion.

Reimbursement Process

Subject to and unless otherwise specified in the grant agreement created by the Village Attorney, construction may take no longer than 12 months.

When construction is complete, Village staff will inspect the work to ensure it followed the approved project plan and complies with the applicable building, zoning, and safety codes.

Grant reimbursements will be made after the following documentation has been submitted to the Village:

- Copies of all paid invoices and cancelled checks for all of the work described in the approved grant. All paid project expenditures must be acknowledged or signed and dated by the project contractors.
- Copies of the signed contracts with the contractors that were chosen to do the work.
- Photograph(s) of the completed project.

The Village of Whitefish Bay reserves the right to refuse reimbursement in whole or in part for project expenditures that do not follow the original project plan/grant agreement and/or do not comply with the applicable building, zoning, and safety codes.

Evaluation Criteria

The submission of a grant application does not guarantee the awarding of funds. The awarding of funds is at the sole discretion of the Community Development Authority and/or the Village Board.

During the evaluation process, the Village will review a grant application based on the following criteria:

1. Is the grant application complete with all required materials? Does the application fully outline the conditions and details of the grant request and need of funding?
2. Did the applicant pass the background and credit checks?
3. Does the proposed project achieve one or more of the funding outcomes of the Downtown Incentive Grant program? (See page 5)
4. Is the proposed project located within the Investment Focus Area of the Silver Spring Drive Business District?
5. Is the proposed project consistent with the 2016 Silver Spring Drive Master Plan Update?
6. Is the proposed project consistent with the Whitefish Bay BID 2017-2019 Strategic Plan?
7. For exterior renovations, is the proposed project consistent with Village of Whitefish Bay Zoning District 11 Site and Building Design Standards?
8. Will the project leverage private sector investment that would not occur but for the grant?
9. Does the grant offset a verifiable shortfall in debt and/or equity funds available to the project from the applicant and/or private sector?
10. Can the applicant demonstrate strong past business performance and the requisite professional experience to prove project viability?

The CDA may also consider the estimated positive impacts to the District in relationship to the level of public investment requested. The amount of the grant request may also be evaluated based on the financial benefits to the TID, particularly for projects where the grant award amount exceeds $50,000.

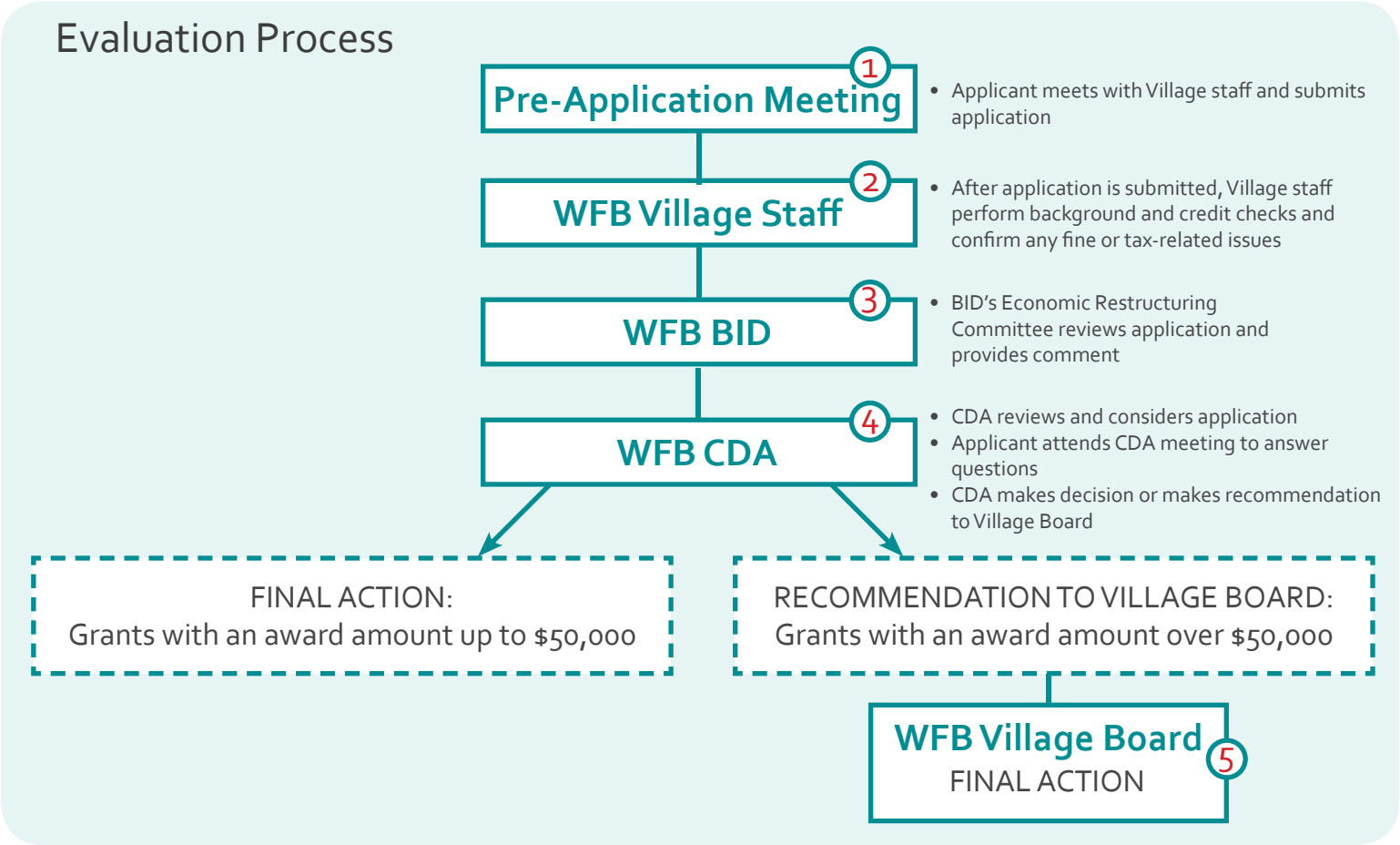

Conditions of the Evaluation Process

The Community Development Authority and Village Board reserve the right to review applications with other considerations as they deem appropriate.

The awarding of funds will be subject to a grant agreement prepared by the Village Attorney.

Applicants and their contractors should anticipate the evaluation process to take up to sixty (60) days for a full review from the time a completed application is submitted until a decision is made. If denied by the Community Development Authority or Village Board, Village staff will inform the applicant in written form within five (5) business days of application decision with the reasons for the denial. Applicants receiving a denial may re-apply for a new project grant after six (6) months.

Village staff will maintain a record of each completed application and process recommendations.

Eligible Project Costs

For applications to be eligible for Village grant funds, the CDA and/or Village Board must determine that the project meets or exceeds the funding outcomes outlined within this program manual (page 5). Projects or costs deemed to be deferred maintenance will be considered only for historic or safety reasons and only where deferred maintenance was not the result of the action or inaction of the applicant. Upon CDA and/or Village Board determination that the project is eligible, the following may be considered eligible costs for consideration during the application review:

- ADA compliance improvements
- Building or land acquisition
- Cleaning of exterior building surfaces
- Electrical wiring
- Flooring
- Heating and air conditioning
- Interior demolition
- Landscaping improvements and planters
- New awnings
- New building construction
- Outdoor seating installations
- Painting of indoor and outdoor building surfaces
- Patio or plaza materials
- Permanent interior and exterior lighting
- Plumbing
- Professional design and engineering services
- Removal, repair, and/or replacement of existing signs and awnings
- Repair and/or replacement of the original building's materials and decorative details which are deteriorated or missing
- Repair of non-original materials which cannot be removed due to deterioration of the underlying original building material
- Repair, replacement, or addition of entrances, doors, display windows, transoms, or second story windows
- Tuck pointing and masonry repair
- Upper story accessibility improvements

Ineligible Project Costs

Projects and expenses, such as the following, are not eligible:

- Conversion of first floor commercial space to residential use
- Correction of code violations, including the screening of mechanical equipment
- Exterior demolition, including emergency or safety-related demolition expenses (with the exception of demolition that is required for larger catalytic improvement projects)
- Flood or water damage repairs
- Furnishings, equipment, or personal / business property not affixed to the real estate
- Legal fees
- Parking lot resurfacing
- Permit fees
- Pest extermination
- Removal without replacement of architecturally significant features and design elements
- Work begun prior to application submittal or done without a required building permit as part of an approved project

Properties with the following issues are not eligible for the grant program:

- Properties with delinquent fees owed to the Village of Whitefish Bay or with an active code compliance matter
- Properties with real estate tax delinquencies, or in litigation, condemnation, foreclosure, or receivership

COMPLETING THE APPLICATION

© Breadsmith

DOWNTOWN
INCENTIVE GRANT PROGRAM
Village of Whitefish Bay

Application Checklist

Following a project review meeting with Village staff, prospective applicants must assemble the following materials as part of a complete application to be reviewed by the Community Development Authority and Village Board.

SUBMITTAL REQUIREMENTS

A complete submittal allows for a timely and responsive review. The Village may hold any incomplete applications until all materials are received. Note that the application will be evaluated based on the criteria listed on page 10. A complete application will address each of these criteria.

- ☐ 1. Completed and signed application form.

Additional required attachments:

- ☐ 2. Written project description; include explanation of how the project achieves the goals of the vision for the District, and how this project achieves the funding outcomes outlined in the grant program.
- ☐ 3. Itemized list of improvements and project costs (to be provided in addition to the contractor bids).
- ☐ 4. Photographs of existing interiors and/or exteriors where improvements will occur.
- ☐ 5. Project schedule.
- ☐ 6. Completed bids from at least three (3) contractors. Sole source bids for specialized work may be acceptable provided that reasonable attempts were made to obtain additional bids.
- ☐ 7. Drawings and/or modified photographs clearly showing proposed improvements, noting what is existing and what is proposed. Drawings and photos should be dated within the past year.
- ☐ 8. Executed lease for a commercial space of at least three (3) years, if a tenant.
- ☐ 9. If the applicant is a tenant of a commercial space, the property owner must provide written permission and approval.
- ☐ 10. Most recent three (3) years of business tax returns.
- ☐ 11. Business financial statements, including a current business plan, most recent year-end income statement, and balance sheet.
- ☐ 12. Project-specific sources and uses of funds. For example, list: debt, equity investment by the principal(s), bank loans, grants, or other equity investments. See Evaluation Criteria #9, page 10.

DOWNTOWN
INCENTIVE GRANT PROGRAM
Village of Whitefish Bay

Application

APPLICANT NAME: _____

☐ **BUSINESS OWNER (TENANT)** ☐ **PROPERTY OWNER**

PHONE NUMBER: _____

E-MAIL: _____

CO-APPLICANT NAME: _____

☐ **BUSINESS OWNER (TENANT)** ☐ **PROPERTY OWNER**

PHONE NUMBER: _____

E-MAIL: _____

BACKGROUND & CREDIT CHECK AUTHORIZATION

I,_____(print name), do hereby give permission for the Village of Whitefish Bay to conduct a background and credit check in relation to my application for a Downtown Incentive Grant. I will provide information that is necessary for the Village to conduct such investigations.

SIGNATURE: _____

PRINTED NAME: _____

DATE: _____

FOR VILLAGE STAFF ONLY:

COMPLETENESS OF APPLICATION

- ☐ Pre-development Meeting w/ Village staff
- ☐ Application Form & Project Materials
- ☐ Business Operations Information
- ☐ Background Check
- ☐ Credit Check
- ☐ NO fine or tax-related issues

BID REVIEW

- ☐ Review Accomplished
- ☐ Commentary Provided

TYPE OF PHYSICAL SPACE ENHANCEMENT

- ☐ Façade Renovation
- ☐ Interior Building Renovation
- ☐ Upper-story Occupancy
- ☐ Roofscape
- ☐ Larger Improvement Project

DOWNTOWN
INCENTIVE GRANT PROGRAM
Village of Whitefish Bay

Application

The section below refers to the property location of the project within this application.

NAME OF BUSINESS: _____

TYPE OF BUSINESS: _____

PROPERTY ADDRESS: _____

TOTAL BUILDING AREA (SQ. FT.): _____ **(EXISTING)**

TOTAL PROJECT AREA (SQ. FT.)

Building Addition: _____

Interior Renovated Space: _____

Exterior Site Modifications: _____

NO. OF FLOORS IN BUILDING: _____

CURRENT ASSESSED VALUE OF THE PROPERTY: $_____

LEASE EXPIRATION DATE: _____

PROJECT BUDGET

Complete spreadsheet on next page.

A. Total Project Budget	$_____
B. Total Eligible Costs	$_____
C. Grant Request	$_____

Grant request is _____ % of the total project budget of eligible expenses

HAVE YOU PREVIOUSLY RECEIVED GRANT FUNDING FROM THE VILLAGE?

☐ **YES** When and for how much? _____ ☐ **NO**

APPLICANT SIGNATURE: _____

APPLICANT PRINTED NAME: _____

DATE: _____

HOW DID YOU HEAR ABOUT THIS GRANT PROGRAM?

_____

DOWNTOWN
INCENTIVE GRANT PROGRAM
Village of Whitefish Bay

Application

ITEMIZED LIST OF IMPROVEMENTS AND PROJECT COSTS

Use additional sheets or attachments if necessary

ELIGIBLE EXPENSES		
Description of Work	Cost	Bid or Estimate Provided
		☐ Bid ☐ Estimate
		☐ Bid ☐ Estimate
		☐ Bid ☐ Estimate
		☐ Bid ☐ Estimate
		☐ Bid ☐ Estimate
		☐ Bid ☐ Estimate
TOTAL		Enter in Box "B," page 15

INELIGIBLE EXPENSES		
Description of Work	Cost	Bid or Estimate Provided
		☐ Bid ☐ Estimate
		☐ Bid ☐ Estimate
		☐ Bid ☐ Estimate
TOTAL		May be used to calculate "Total Project Budget," Box "A," page 15